SONY

KV-2062EC/ME2

MODEL

SERVICE MANUAL

KV-2062EC / KV-2066EC
RM-635 RM-635

AEP Model
Chassis No. SCC-524A-A

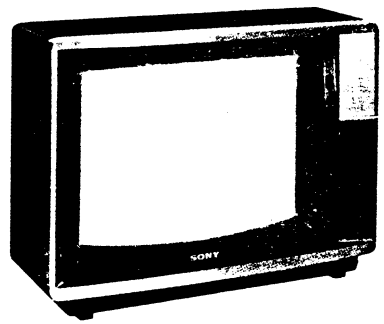

September, 1983

XE-3 CHASSIS

CIRCUIT BOARD LOCATION

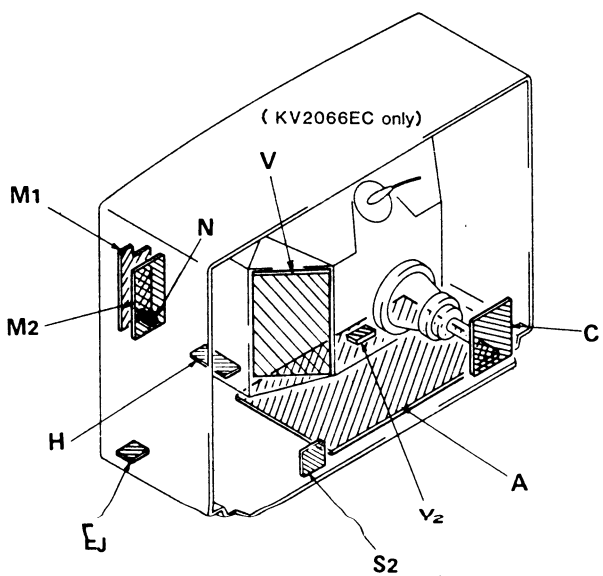

SPECIFICATIONS

KV-2062EC

Television system	CCIR TV standards (system B, G and H)
Color system	PAL
Channel coverage	VHF channels E2–U20 UHF channels E21–E68
Programing system	30 programs (including 1 program for auxiliary RF input) Automatic programing digital tuning
Picture tube	Trinitron system Approx. 52 cm (20 inches) Approx. 49 cm screen measured diagonally 100-degree deflection
Antenna	75-ohm standard coaxial socket (DIN 45325/IEC 169-2)
Speaker	Two-way: Approx. 5 × 2.7 cm tweeter Approx. 8 × 12 cm woofer
Audio output	2.0 W (with 10% harmonic distortion)
RF AUX socket	Auxiliary RF input for one of the VHF channels E2–U20 and UHF channels E21–E68 75-ohm (coaxial type)
Power requirements	220 V ac, 50 Hz
Power consumption	89 W (max.)
Dimensions	Approx. 613 × 459 × 491 mm (w/h/d)
Weight	Approx. 25 kg
Accessories supplied	Remote Commander RM-635 (1) Earphone (1)

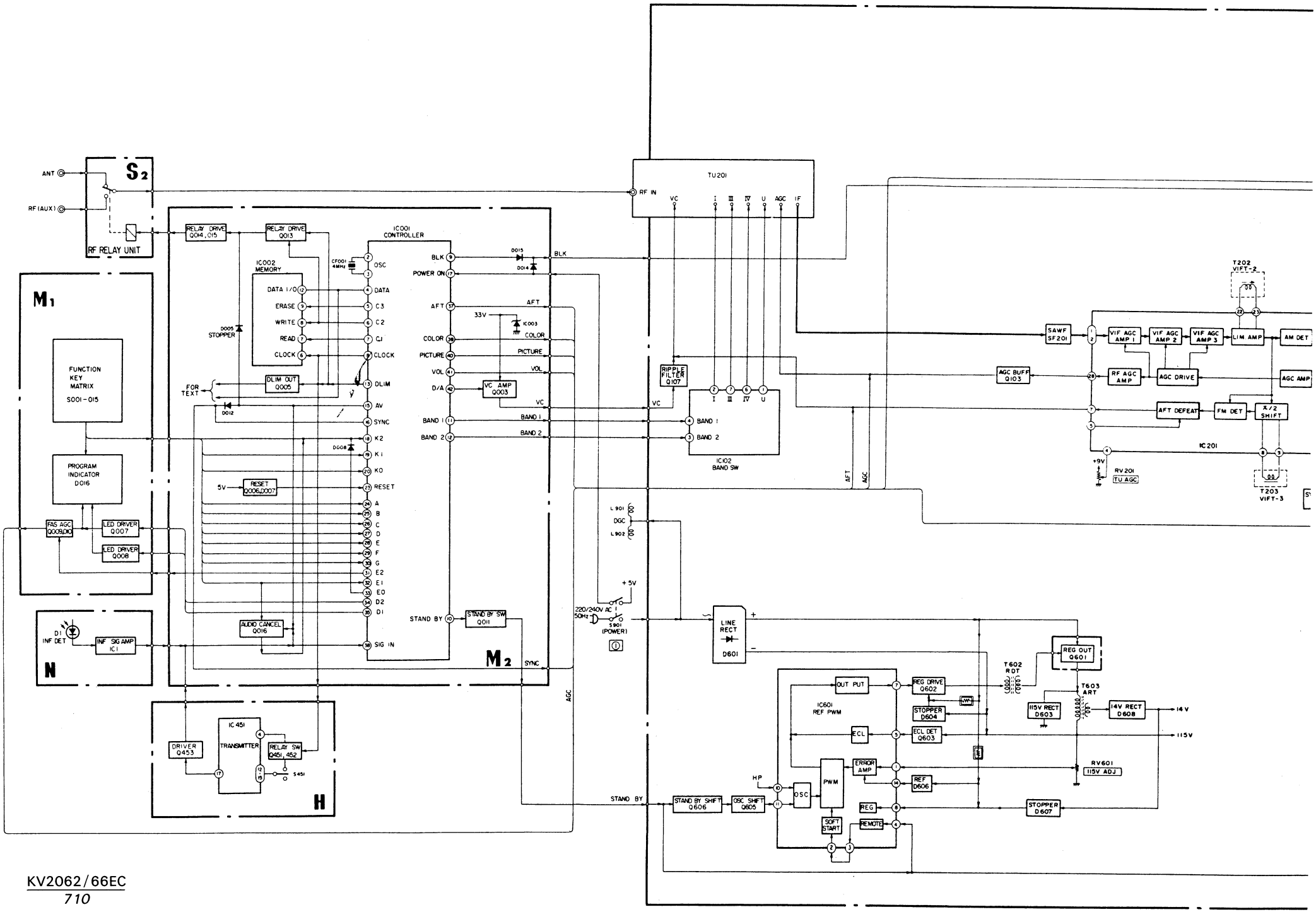

ANT
RF (AUX)
S2
RF RELAY UNIT
M1
FUNCTION KEY MATRIX S001-015
PROGRAM INDICATOR D016
FAS AGC Q009,010
LED DRIVER Q007
LED DRIVER Q008
D1 INF DET
INF SIG AMP IC1
N
RELAY DRIVE Q014, 015
RELAY DRIVE Q013
IC002 MEMORY
DATA I/O
ERASE
WRITE
READ
CLOCK
D005 STOPPER
FOR TEXT
D012
DLIM OUT Q005
IC001 CONTROLLER
CF001 4MHz
OSC
DATA
C3
C2
C1
CLOCK
DLIM
AV
SYNC
K2
K1
K0
RESET
A
B
C
D
E
F
G
E2
E1
E0
D2
D1
SIG IN
D008
5V
RESET Q006,D007
AUDIO CANCEL Q016
BLK
POWER ON
AFT
COLOR
PICTURE
VOL
D/A
BAND 1
BAND 2
STAND BY
D015
D014
33V
IC003
VC AMP Q003
STAND BY SW Q011
M2
SYNC
AGC
IC451 TRANSMITTER
DRIVER Q453
RELAY SW Q451, 452
S451
H
TU201
RF IN
VC
I
III
IV
U
AGC
IF
RIPPLE FILTER Q107
IC102 BAND SW
L901
DGC
L902
+5V
220/240V AC 50Hz
S901 (POWER)
LINE RECT D601
STAND BY
STAND BY SHIFT Q606
OSC SHIFT Q605
HP
OSC
PWM
SOFT START
OUT PUT
IC601 REF PWM
ECL
ERROR AMP
REG
REMOTE
REG DRIVE Q602
STOPPER D604
ECL DET Q603
REF D606
STOPPER D607
T602 RDT
REG OUT Q601
T603 ART
115V RECT D603
14V RECT D608
14V
115V
RV601 115V ADJ
T202 VIFT-2
SAWF SF201
VIF AGC AMP 1
VIF AGC AMP 2
VIF AGC AMP 3
LIM AMP
AM DET
AGC BUFF Q103
RF AGC AMP
AGC DRIVE
AGC AMP
AFT DEFEAT
FM DET
X/2 SHIFT
IC201
+9V
RV201 TU AGC
T203 VIFT-3

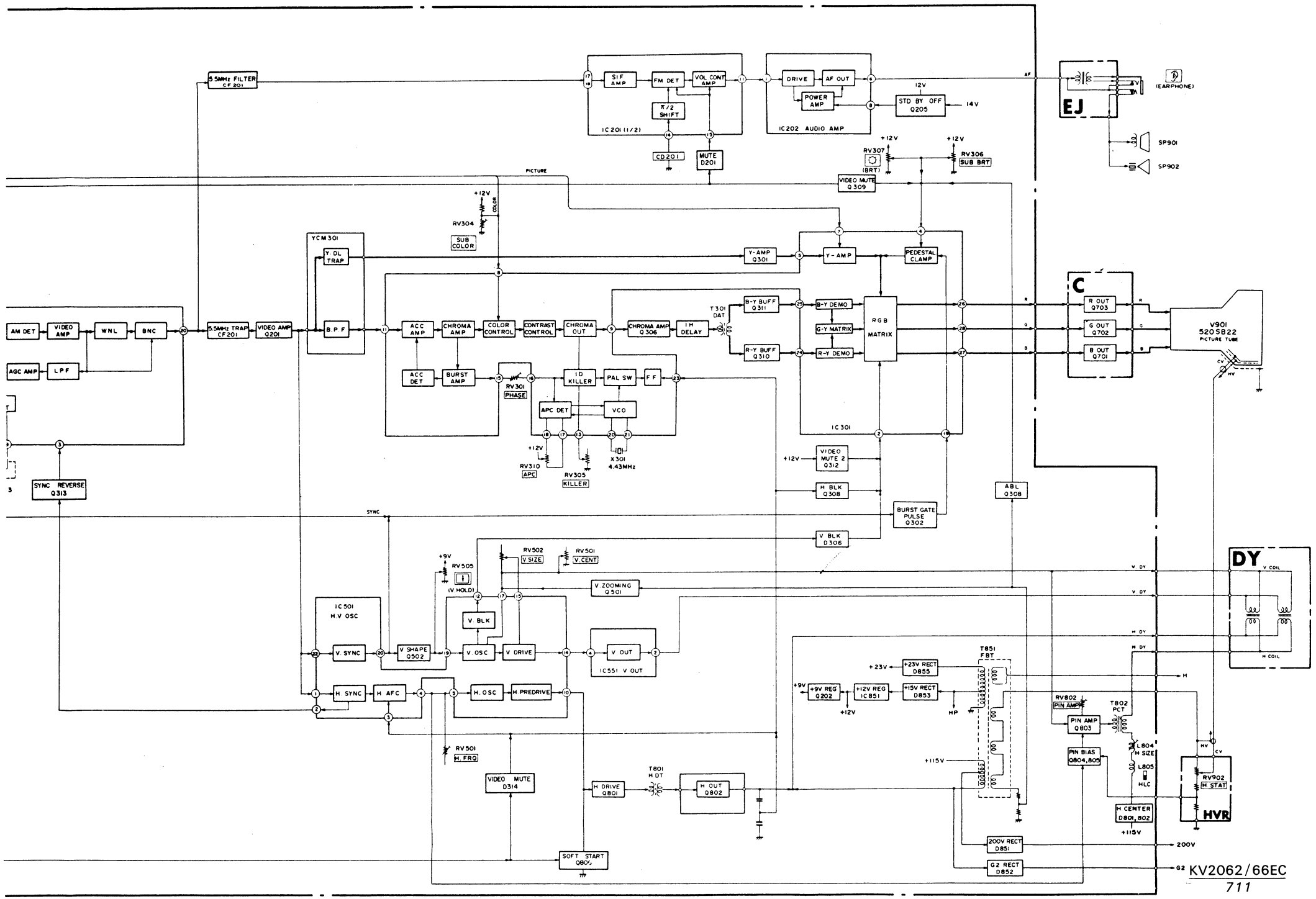
5.5MHz FILTER CF201
SIF AMP
FM DET
VOL CONT AMP
π/2 SHIFT
IC201 (1/2)
CD201
MUTE D201
DRIVE
AF OUT
POWER AMP
IC202 AUDIO AMP
STD BY OFF Q205
12V
14V
AF
EJ
(EARPHONE)
SP901
SP902
RV307 (BRT)
RV306 SUB BRT
+12V
PICTURE
VIDEO MUTE Q309
RV304 SUB COLOR
COLOR
YCM301
Y DL TRAP
B.P.F
Y-AMP Q301
Y-AMP
PEDESTAL CLAMP
AM DET
VIDEO AMP
WNL
BNC
5.5MHz TRAP CF201
VIDEO AMP Q201
AGC AMP
LPF
ACC AMP
CHROMA AMP
COLOR CONTROL
CONTRAST CONTROL
CHROMA OUT
CHROMA AMP Q306
1H DELAY
T301 DAT
B-Y BUFF Q311
R-Y BUFF Q310
B-Y DEMO
G-Y MATRIX
R-Y DEMO
RGB MATRIX
IC301
C
R OUT Q703
G OUT Q702
B OUT Q701
V901 520SB22 PICTURE TUBE
ACC DET
BURST AMP
RV301 PHASE
ID KILLER
PAL SW
F.F
APC DET
VCO
X301 4.43MHz
RV310 APC
RV305 KILLER
VIDEO MUTE 2 Q312
H BLK Q308
ABL Q308
SYNC REVERSE Q313
SYNC
BURST GATE PULSE Q302
V BLK Q306
RV502 V.SIZE
RV501 V.CENT
+9V
RV505 (V.HOLD)
V.ZOOMING Q501
IC501 H.V OSC
V.BLK
V.SYNC
V SHAPE Q502
V.OSC
V DRIVE
V OUT
IC551 V OUT
DY
V COIL
H COIL
V DY
H DY
H.SYNC
H.AFC
H.OSC
H.PREDRIVE
RV501 H.FRQ
VIDEO MUTE D314
H DRIVE Q801
T801 H DT
H OUT Q802
SOFT START Q803
+23V
+23V RECT D855
+9V REG Q202
+12V REG IC851
+15V RECT D853
T851 FBT
HP
+115V
RV802 PIN AMP
PIN AMP Q803
T802 PCT
PIN BIAS Q804,805
L804 H SIZE
L805 HLC
H CENTER D801,802
RV902 H STAT
HVR
200V RECT D851
G2 RECT D852
200V
G2
H

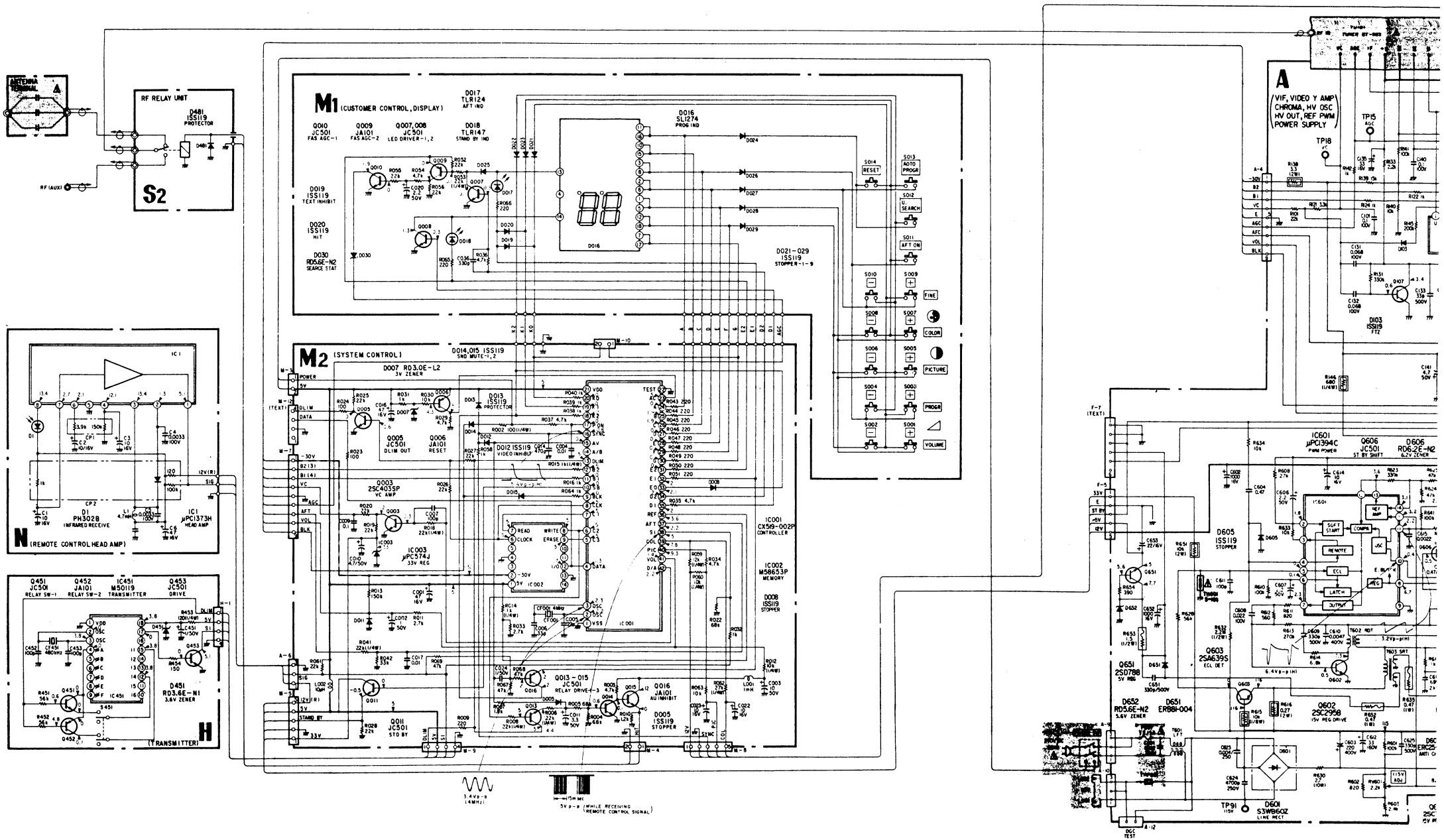
ANTENNA TERMINAL
RF RELAY UNIT
D481 ISS119 PROTECTOR
RF (AUX)
S2
M1 (CUSTOMER CONTROL, DISPLAY)
D017 TLR124 AFT IND
Q010 JC501 FAS AGC-1
Q009 JA101 FAS AGC-2
Q007, 008 JC501 LED DRIVER-1, 2
D018 TLR147 STAND BY IND
D019 ISS119 TEXT INHIBIT
D020 ISS119 HIT
D030 RD5.6E-N2 SEARCE STAT
D016 SL1274 PROG IND
D021-029 ISS119 STOPPER-1-9
S014 RESET
S013 AUTO PROGR
S012 U SEARCH
S011 AFT ON
S010
S009
FINE
S008
S007
COLOR
S006
S005
PICTURE
S004
S003
PROGR
S002
S001
VOLUME
M2 (SYSTEM CONTROL)
D014,015 ISS119 SND MUTE-1, 2
D007 RD3.0E-L2 3V ZENER
Q005 JC501 DLIM OUT
Q006 JA101 RESET
Q003 2SC4035P VC AMP
D013 ISS119 PROTECTOR
D012 ISS119 VIDEO INHIBIT
IC003 μPC574J 33V REG
IC001 CX519-002P CONTROLLER
IC002 M58653P MEMORY
D008 ISS119 STOPPER
Q013-015 JC501 RELAY DRIVE-1-3
Q016 JA101 AU INHIBIT
D005 ISS119 STOPPER
Q011 JC501 STD BY
N (REMOTE CONTROL HEAD AMP)
D1 PH3028 INFRARED RECEIVE
IC1 μPC1373H HEAD AMP
Q451 JC501 RELAY SW-1
Q452 JA101 RELAY SW-2
IC451 M50119 TRANSMITTER
Q453 JC501 DRIVE
D451 RD3.6E-N1 3.6V ZENER
H (TRANSMITTER)
A (VIF, VIDEO Y AMP CHROMA, HV OSC HV OUT, REF PWM POWER SUPPLY)
TP15 AGC
TP18 VC
IC601 μPC1394C PWM POWER
Q606 JC501 ST BY SHIFT
D606 RD6.2E-N2 6.2V ZENER
D605 ISS119 STOPPER
Q603 2SA639S ECL DET
Q651 2SD788 5V REG
D652 RD5.6E-N2 5.6V ZENER
D651 ERB81-004
Q602 2SC2958 15V REG DRIVE
D601 S3VB60Z LINE RECT
TP91 115V
3.4Vp-p (4MHz)
5Vp-p (WHILE RECEIVING REMOTE CONTROL SIGNAL)

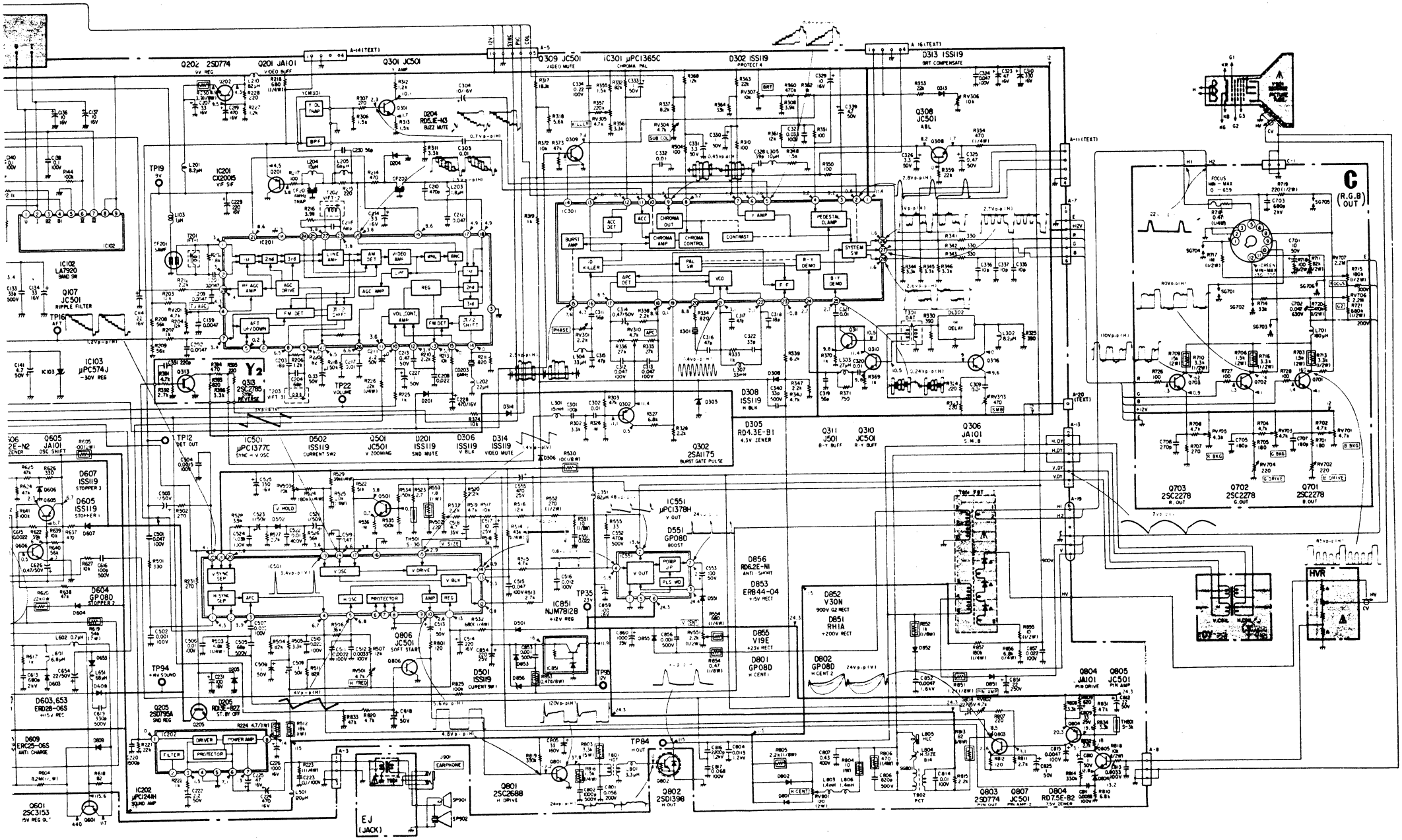
Q202 2SD774
Q201 JA101
Q301 JC501
Q309 JC501
IC301 μPC1365C
D302 ISS119
D313 ISS119
Q308 JC501
IC201 CX20015
IC102 LA7920
Q107 JC501
IC103 μPC574J
IC501 μPC1377C
D502 ISS119
Q501 JC501
D201 ISS119
D206 ISS119
D314 ISS119
D308 ISS119
D305 RD4.3E-B1
Q302 2SA1175
Q311 JC501
Q310 JC501
Q306 JA101
Q703 2SC2278
Q702 2SC2278
Q701 2SC2278
IC551 μPC1378H
D551 GP08D
D856 RD6.2E-N1
D853 ERB44-04
D852 V30N
D851 RH1A
D855 V19E
D801 GP08D
D802 GP08D
IC851 NJM78L12
D501 ISS119
Q806 JC501
Q804 JA101
Q805 JC501
Q803 2SD774
Q807 JC501
Q804 RD7.5E-B2
Q801 2SC2688
Q802 2SD1398
Q601 2SC3153
IC202 μPC1241H
Q205 2SD795A
D205 RD3E-B2
D604 GP08D
D605 ISS119
D607 ISS119
D603,653 ERD28-06S
D609 ERC25-06S
EJ (JACK)
HVR

— M2 BOARD —

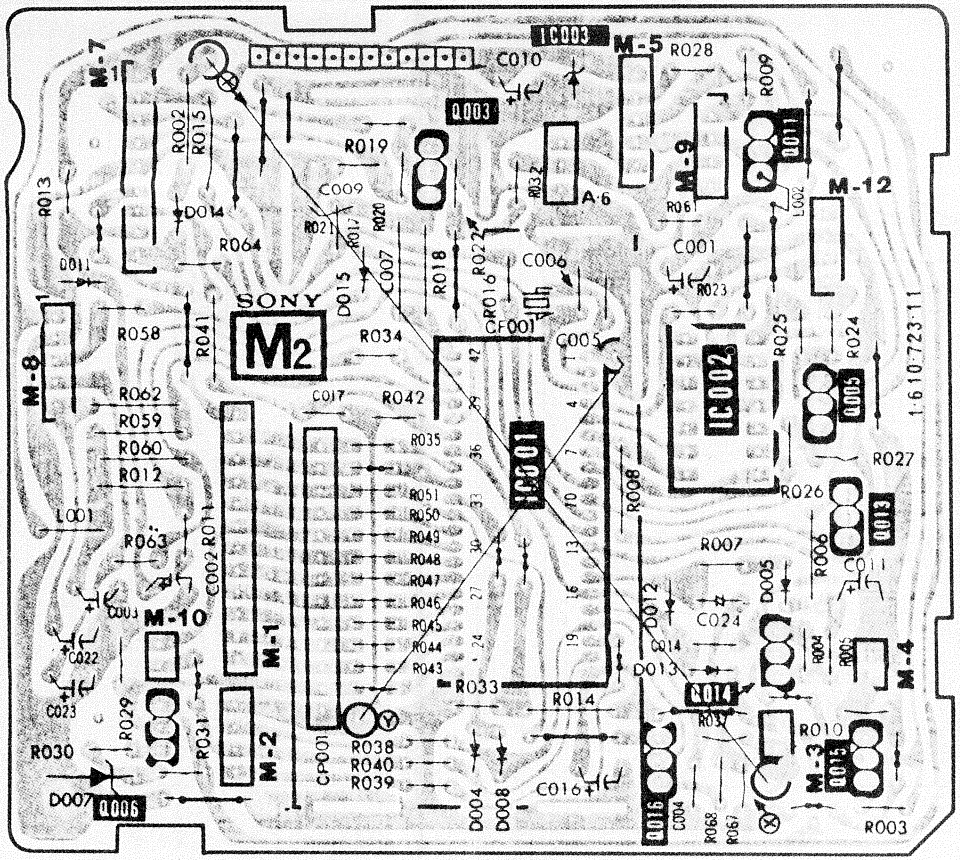

— C BOARD —

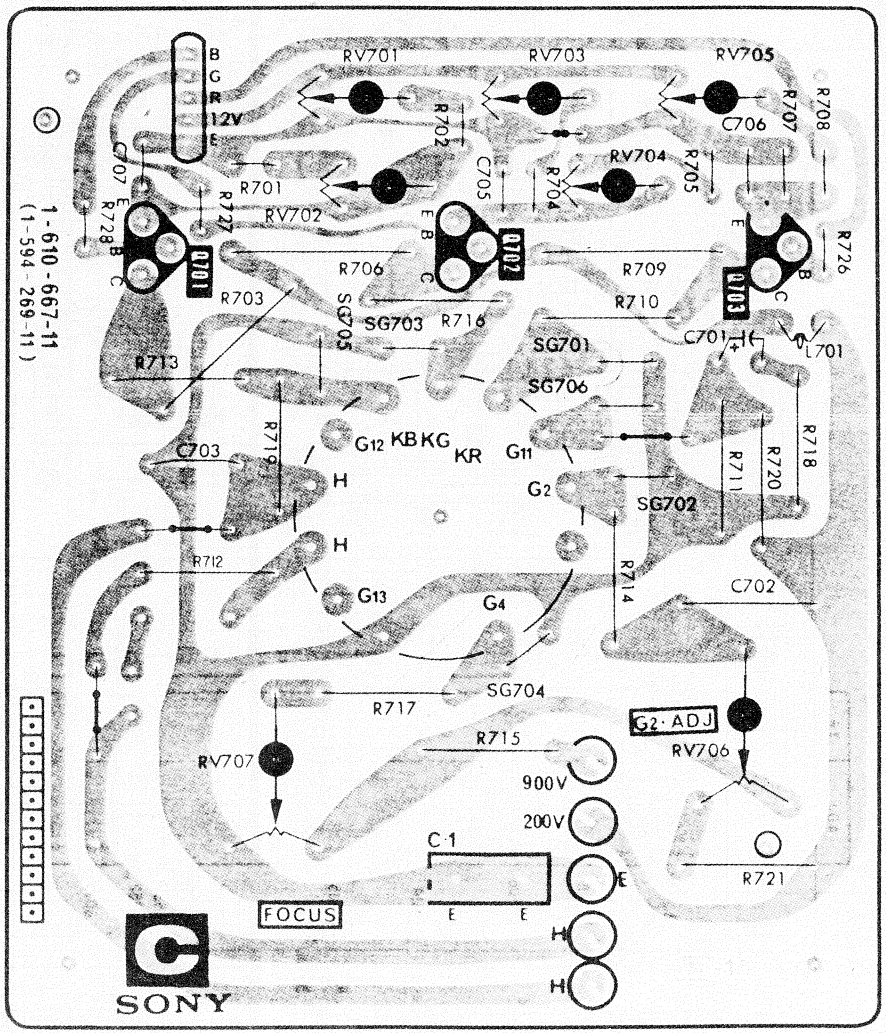

— M1 BOARD —

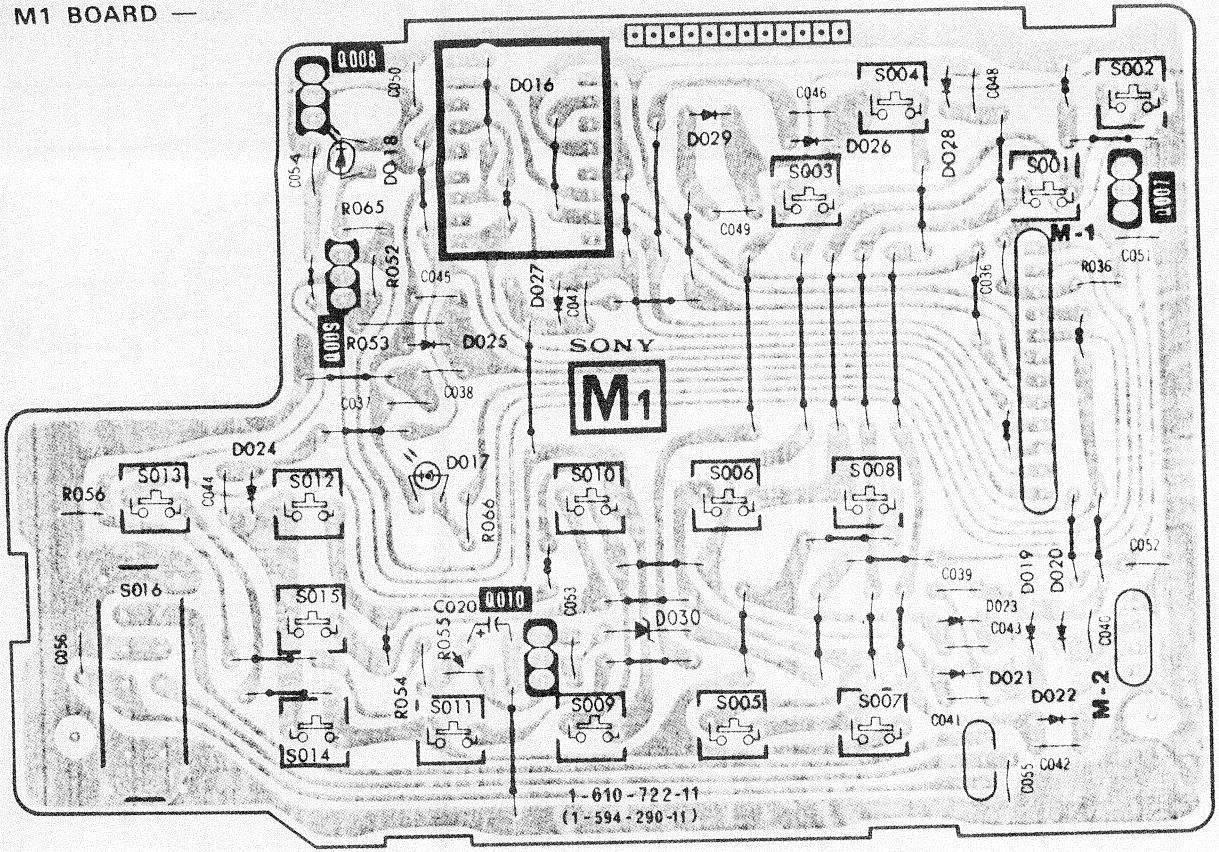

— H BOARD —

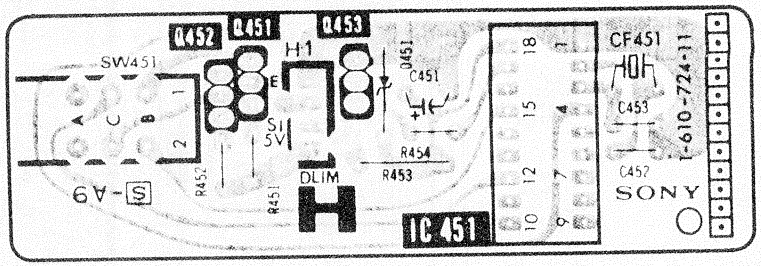

— N BOARD —

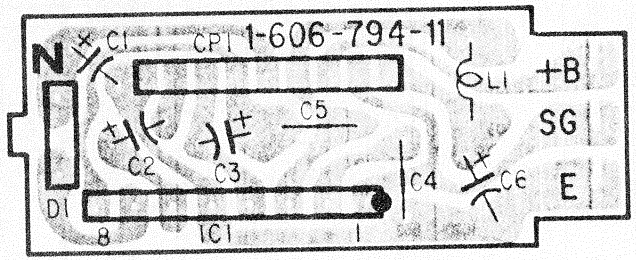

— EJ BOARD —

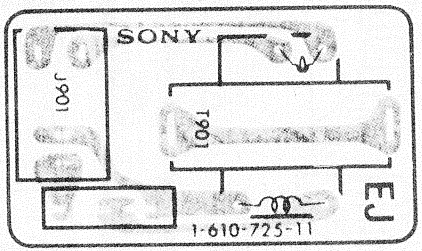

— Y2 BOARD —

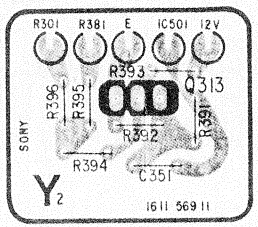

— S2 BOARD —

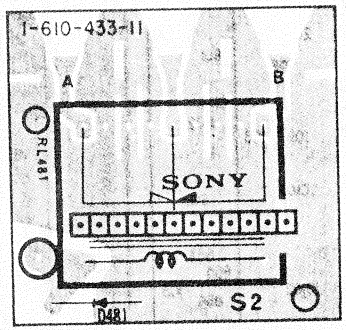

— A BOARD —

Q , IC	D	ADJ	TP
	502		
		RV503	
	305	RV307	
		RV309	
		RV308	
	308		
IC501			92
606 302		RV501 RV301	
605	306	RV301	
		RV502	
		RV305	
806	314	RV304	
501			
IC301			
IC601	315		
312 310,311	605		
		RV551	
	501		
801			
IC551	653	RV802	
	652		
	551		
651 301	607		
803			
308 306			94
IC202			
804		RV601	
309	608,651	RV306	
		RV303	
201			12
805	102		84
603			
802 205 105			
104	804 101		
	204		
	201		
IC201	205 852		93
			16
			19
		RV201	22
	604		
101			
202		RV801	35
106	801		91
602			
	851		15
108 103	802		
			95
IC103	603		
	853		
	855		
IC102	856 103		
			18
601 107			
IC851			
Q , IC	D	ADJ	TP

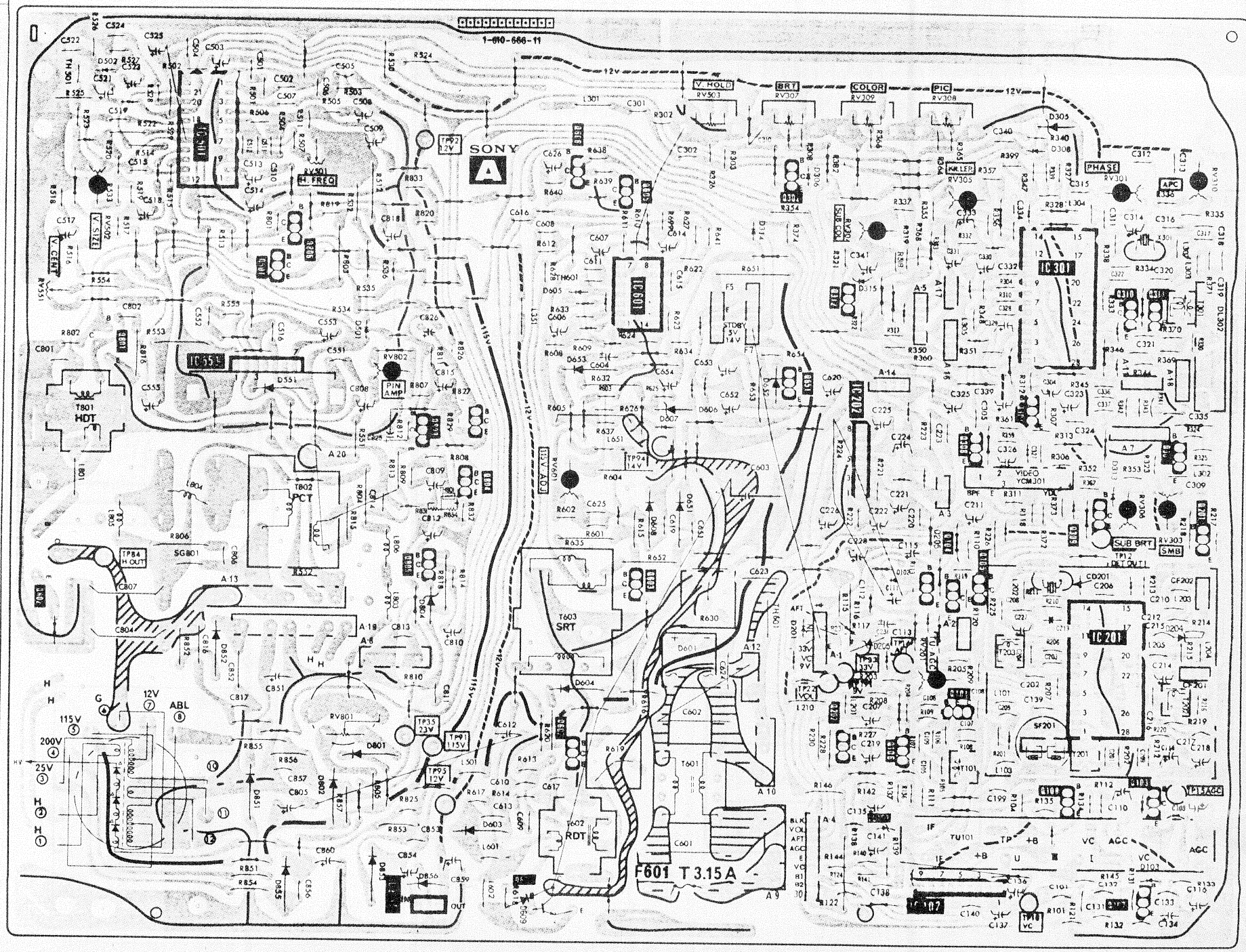

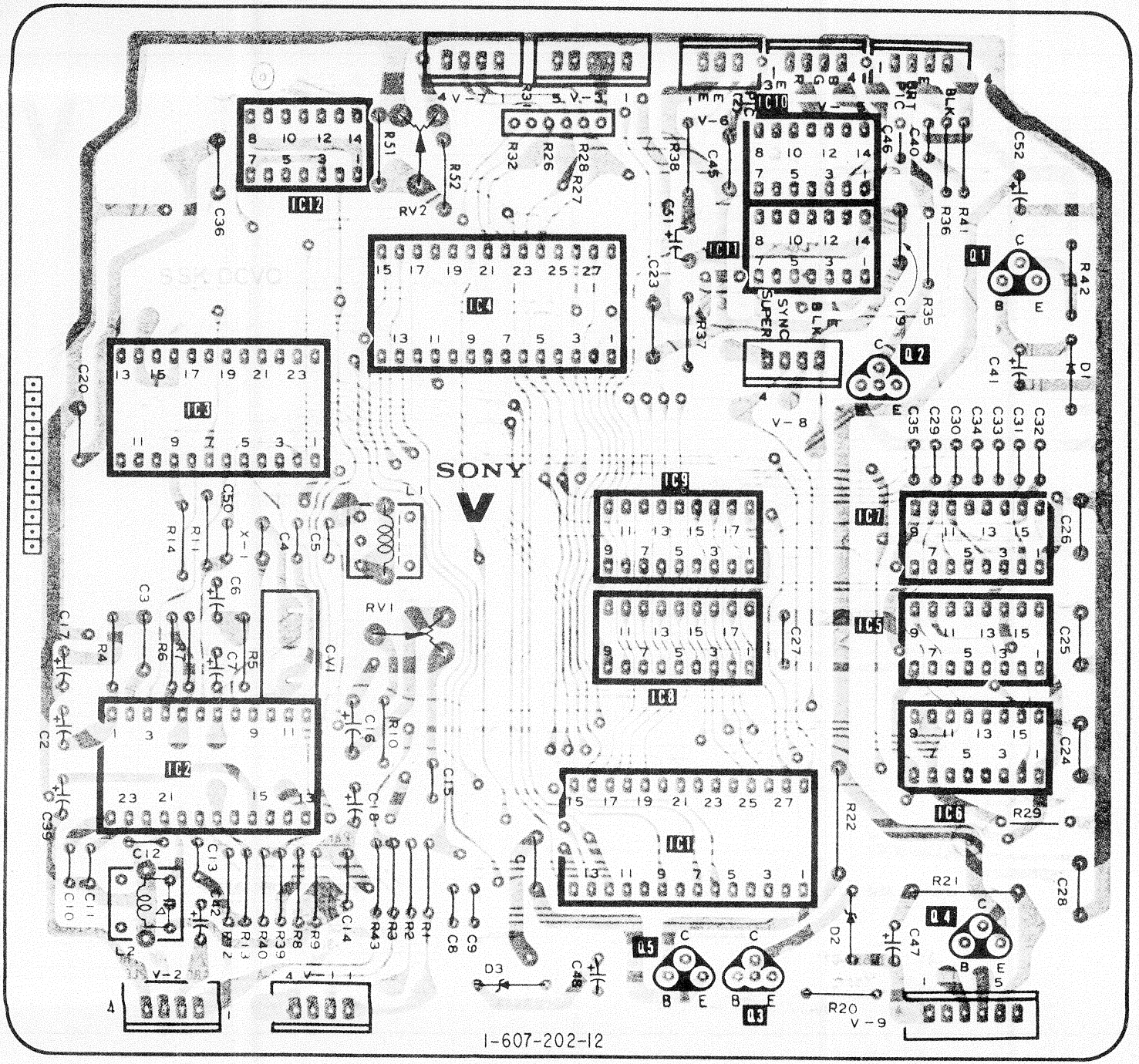

Q, IC	D	ADJ
IC12		
IC10		RV2
IC11		
IC4 1		
2	1	
IC3		
IC9		
IC7		
IC8		
IC5		RV1
IC6		
IC2		
IC1		
4	2	
5, 3	3	
Q, IC	D	ADJ

BLOCK DIAGRAM

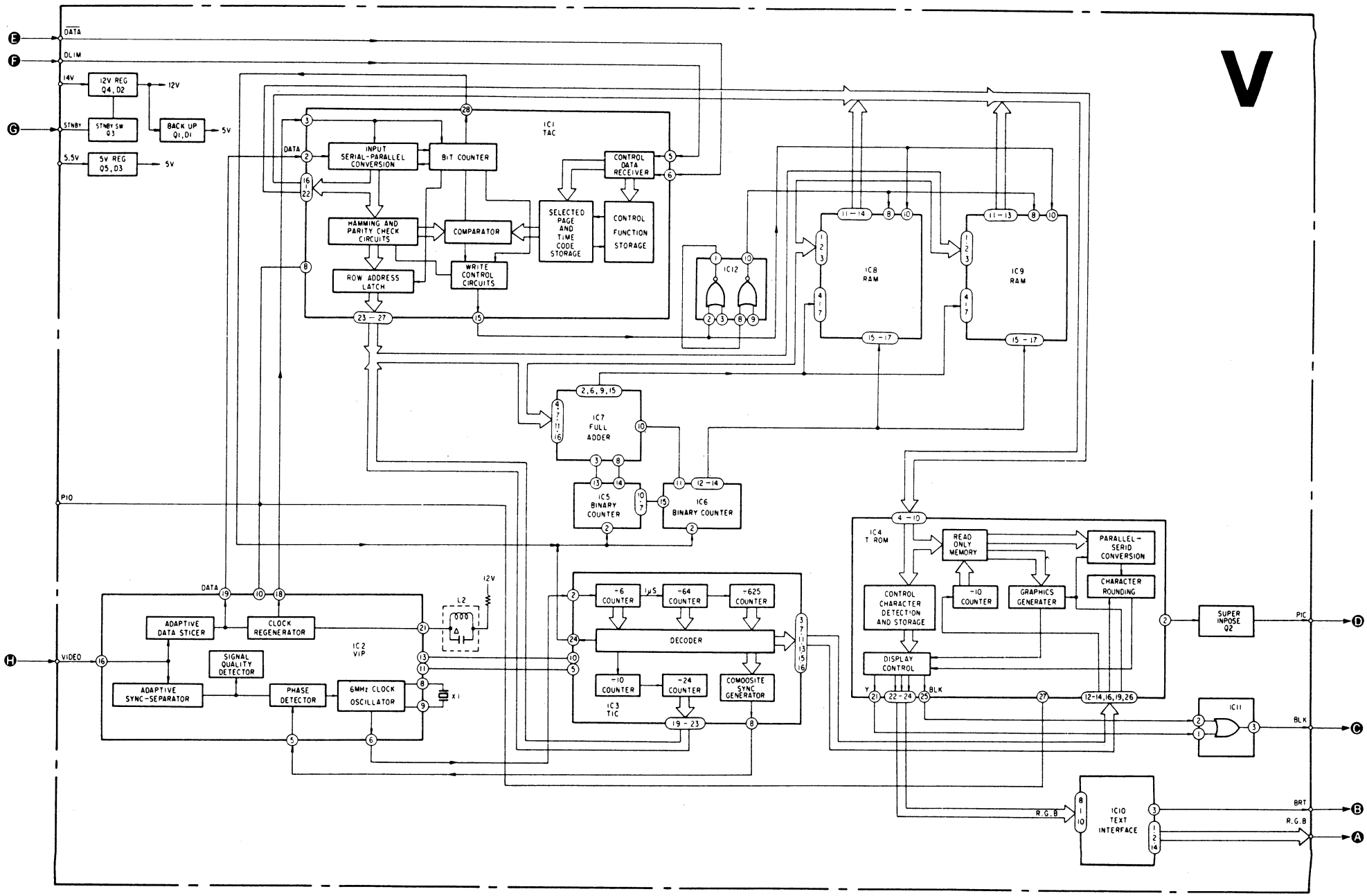

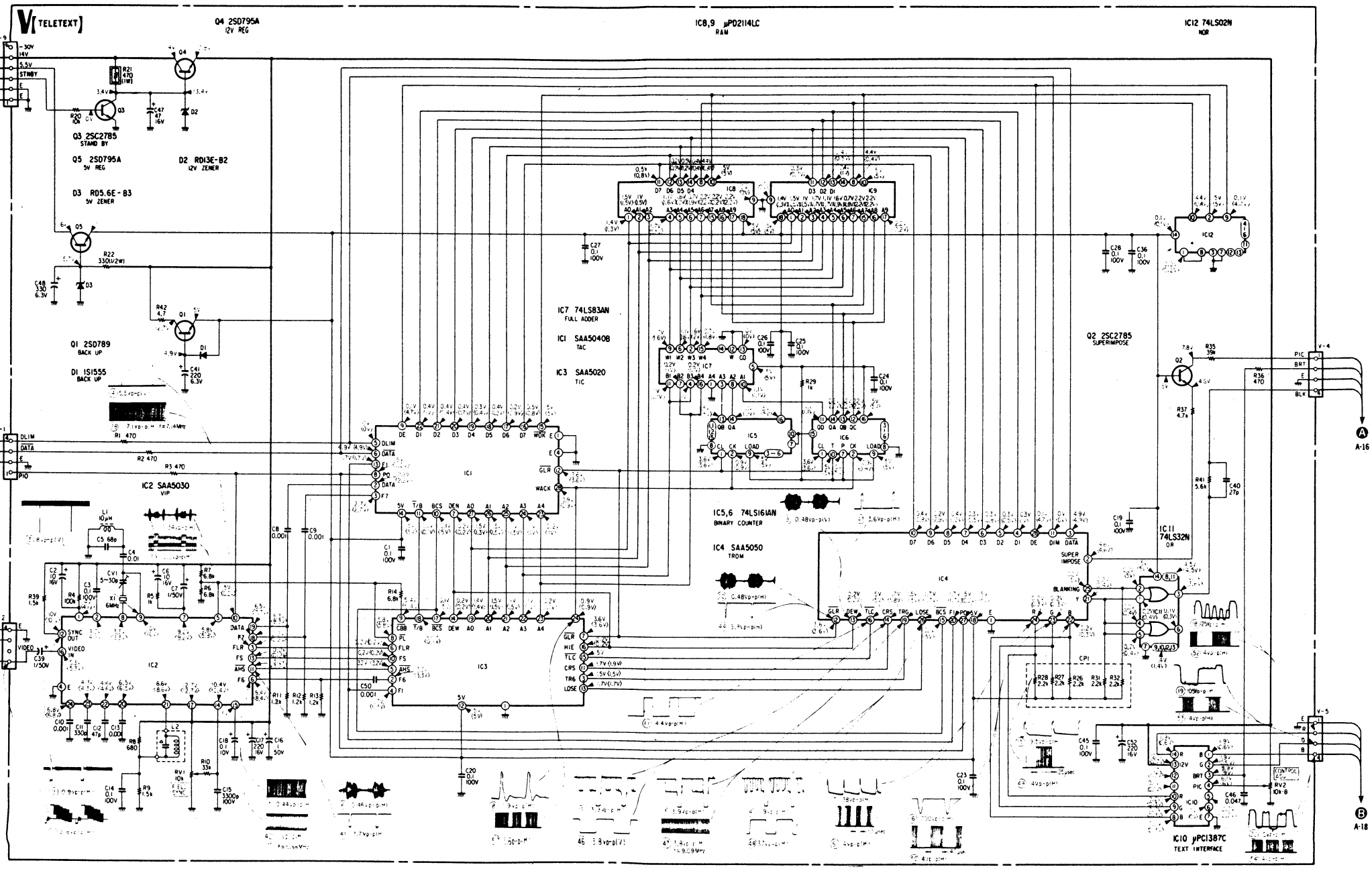
V[TELETEXT]
Q4 2SD795A
12V REG
IC8,9 μPD2114LC
RAM
IC12 74LS02N
NOR
Q3 2SC2785
STAND BY
Q5 2SD795A
5V REG
D2 RD13E-B2
12V ZENER
D3 RD5.6E-B3
5V ZENER
Q1 2SD789
BACK UP
D1 1S1555
BACK UP
IC7 74LS83AN
FULL ADDER
IC1 SAA5040B
TAC
IC3 SAA5020
TIC
Q2 2SC2785
SUPERIMPOSE
IC2 SAA5030
VIP
IC5,6 74LS161AN
BINARY COUNTER
IC4 SAA5050
TROM
IC11
74LS32N
OR
IC10 μPC1387C
TEXT INTERFACE
F-7
M-12
A-14
A-16
A-18

TUNER SCHEMATIC DIAGRAM

– UHF/VHF TUNER BT-883 –

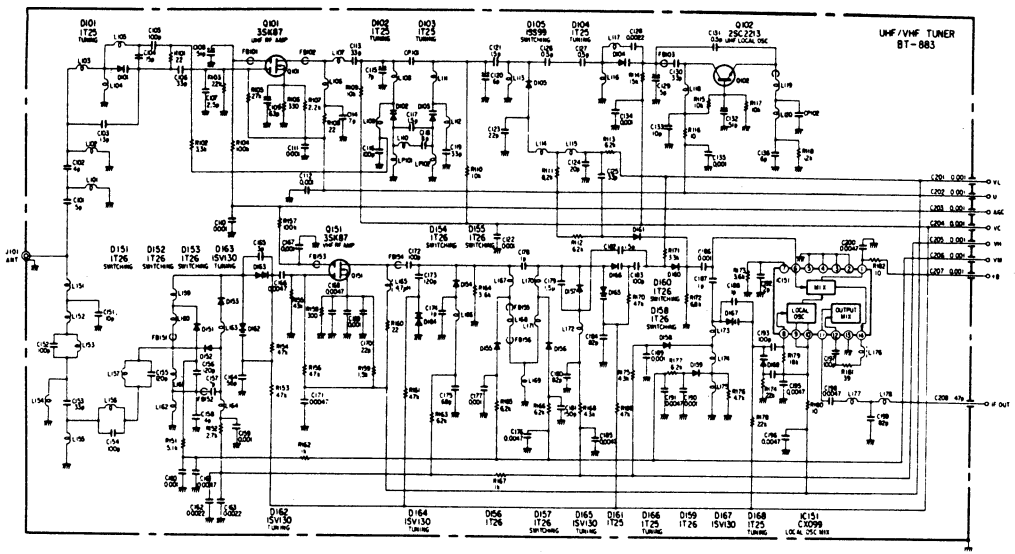

EXPLODED VIEWS

NOTE:
- Items with no part number and no description are not stocked because they are seldom required for routine service.
- The construction parts of an assembled part are indicated with a collation number in the remark column.
- Items marked " ♦ " are not stocked since they are seldom required for routine service. Some delay should be anticipated when ordering these items.

1. BACK COVER

■ : TA, BV3x8 7-685-646-71
● : TA, BV3x12 7-685-648-71

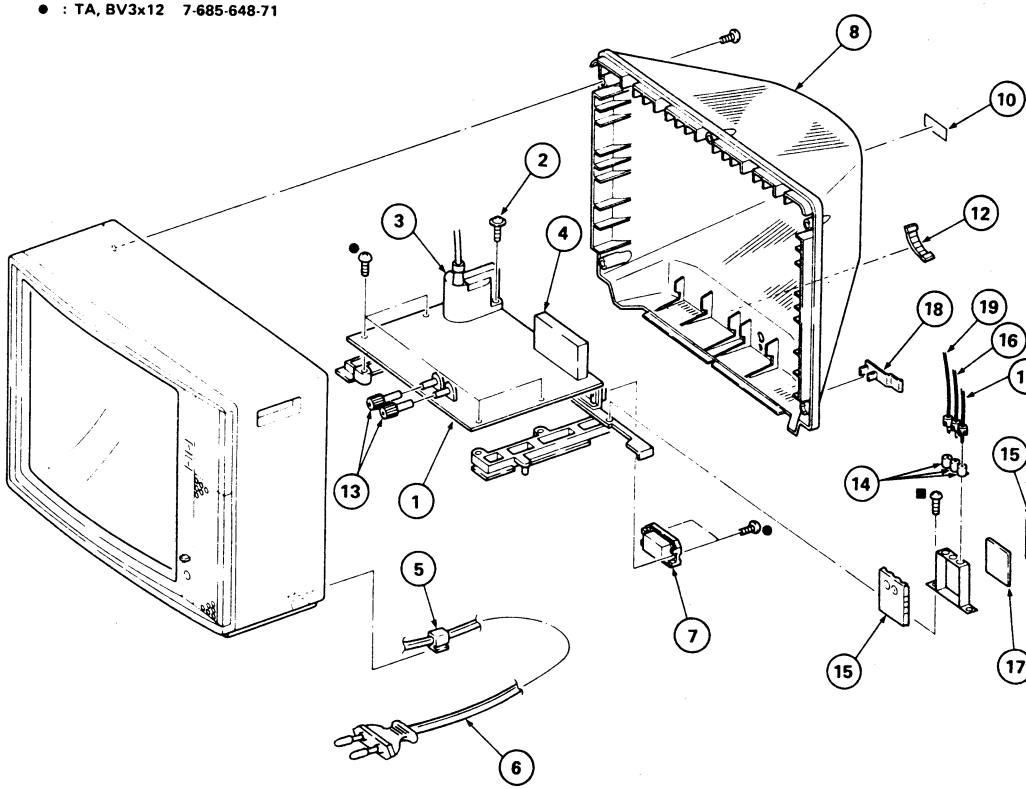

No.	Part No.	Description	Remark
1	♦:A-1295-722-A	A BAORD, COMPLETE	
2	4-302-428-00	HEAD, WASHER, TAPPING SCREW	
3	⚠1-439-303-31	FBT ASSY	
4	⚠1-463-421-21	TUNER, ET (BT-883)	
5	⚠4-022-115-00	HOLDER, AC CORD	
6	⚠1-534-817-XX	CORD, POWER	
7	⚠1-536-683-21	CONNECTOR, COAXIAL ANTENNA	
8	X-4368-904-0	COVER ASSY, BACK	
10	♦:4-368-902-00	LABEL, MODEL NUMBER	

No.	Part No.	Description	Rema
11	1-557-024-41	CABLE (WITH PIN)	
12	3-701-007-00	BAND, BINDING	
13	4-365-226-01	KNOB, VR	
14	♦:1-507-900-00	JACK	
15	♦:4-368-114-00	CASE (LID), RELAY	
16	♦:1-557-009-21	CABLE, P-P	
17	♦:1-610-433-00	S2 BOARD	
18	4-329-127-00	CLAMP, CORD	
19	♦:1-557-024-21	CABLE (WITH PIN)	

KV-2062EC / KV-2066EC
RM-635 RM-635

AEP Model
Chassis No. SCC-524A-A

January, 1984

SUPPLEMENT -1

Subject:

"White color" is added as a variation of the KV-2062EC Bezel Assy and Cabinet Assy.
Please add the following list to the parts list in EXPLODED VIEWS

: added parts

No.	Part No.	Description	Remark
101	X-4368-908-1	BEZEL ASSY (FOR WHITE)	102,103,104,105,106,107,108, 110,111,112,113,114,115,116
102	4-367-205-00	BUTTON (A), POWER	
103	3-662-365-00	SHAFT (S), DOOR	
104	3-703-574-00	RETAINER, DOOR	
105	X-4368-907-1	DOOR ASSY, CONTROL (FOR WHITE)	
106	4-367-213-11	DOOR, SUB CONTROL (FOR WHITE)	
107	3-701-912-00	EMBLEM, SONY, (LARGE)	
108	4-367-232-11	GRILLE, SPEAKER (FOR WHITE)	
110	4-367-209-00	SPRING, COMPRESSION	
111	4-367-208-00	BUTTON (B), POWER	
112	4-367-902-00	BUTTON (A)	
113	4-367-903-00	BUTTON (B)	
114	▲:4-367-913-00	HOLDER, CHANNEL BUTTON	
115	4-367-910-00	PANEL, CONTROL	
116	4-367-909-00	BUTTON, MULTI	
128	X-4368-902-2	CABINET ASSY (FOR WHITE)	

KV-2062EC / KV-2066EC
RM-635 / RM-635

AEP Model

Chassis No. SCC-524A-A

Serial No. 209,451 and later

June, 1984

No. 2

SUPPLEMENT

SUBJECT: CIRCUIT MODIFICATIONS

File the supplement with the service manual.

- **INTRODUCTION**

1. H and Y2 boards have been deleted.
2. A, M1, M2, C and S2 boards patterns have been modified.
3. A, M1, M2, C, N, S2 and V boards have been modified.

SCHEMATIC DIAGRAM

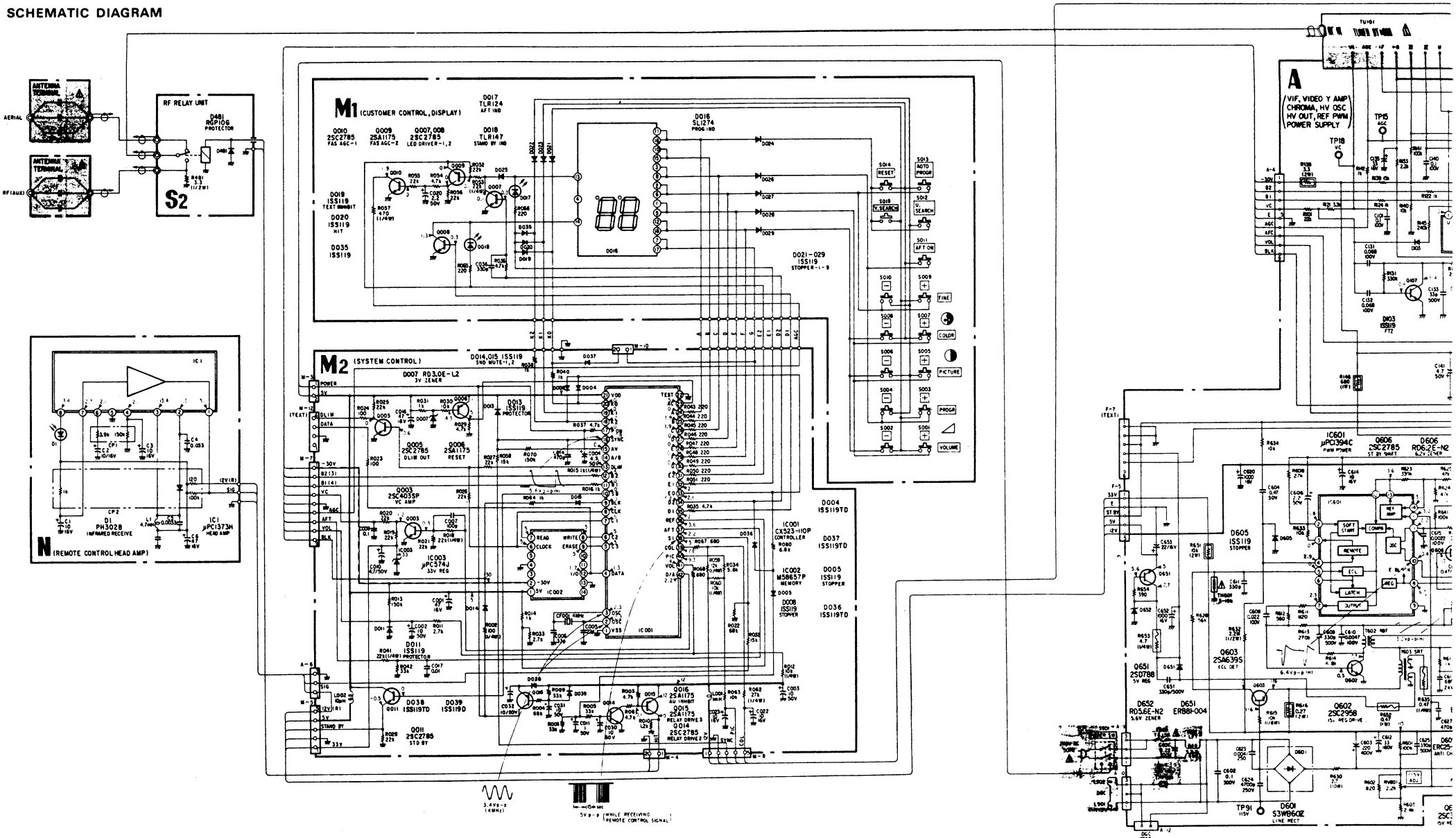

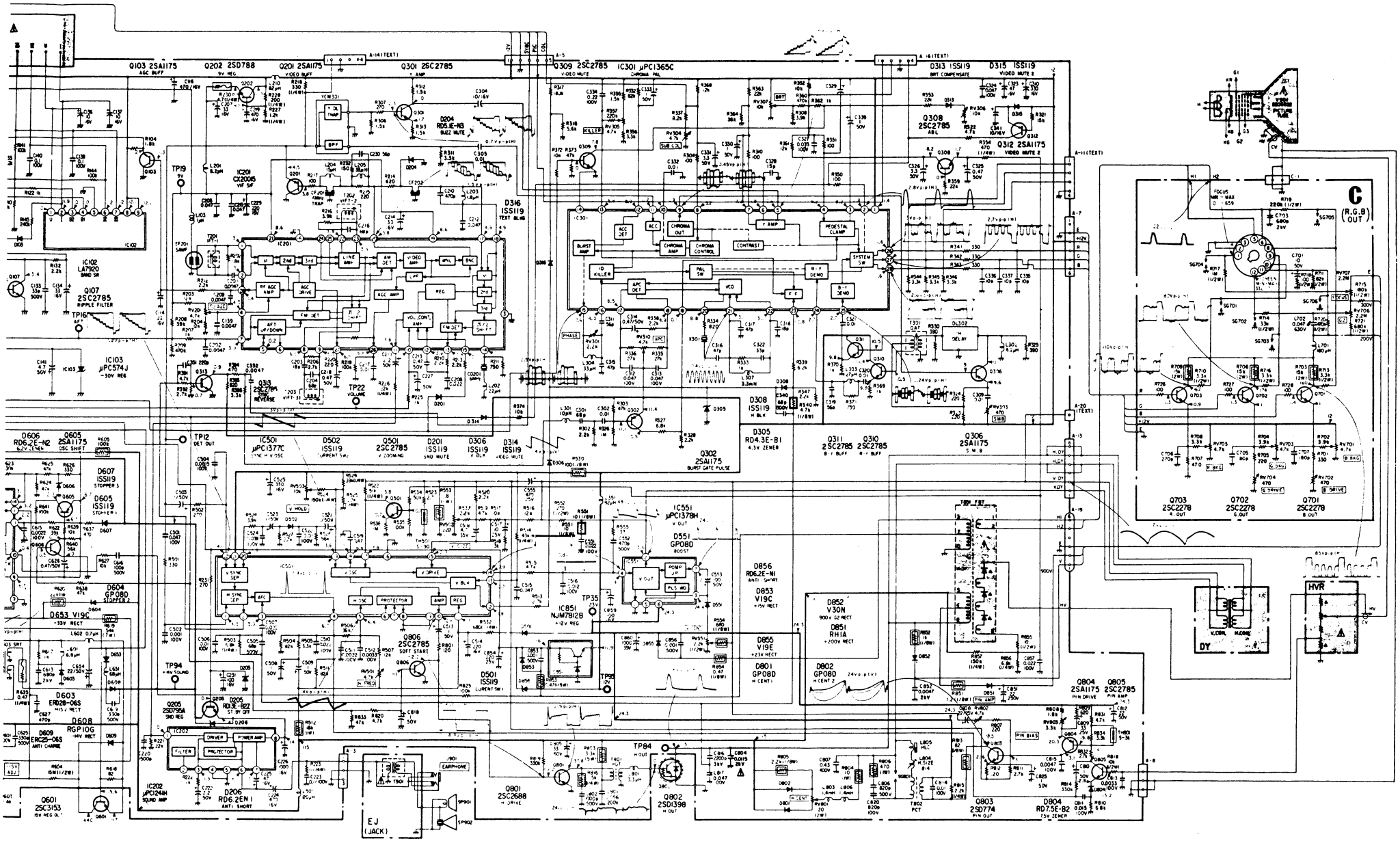
Q103 2SA1175
Q202 2SD788
Q201 2SA1175
Q301 2SC2785
Q309 2SC2785
IC301 μPC1365C
D313 1SS119
D315 1SS119
Q308 2SC2785
Q312 2SA1175
IC102 LA7920
Q107 2SC2785
IC103 μPC574J
IC201 CX20015
D316 1SS119
IC501 μPC1377C
D502 1SS119
Q501 2SC2785
D201 1SS119
D306 1SS119
D314 1SS119
D308 1SS119
D305 RD4.3E-B1
Q302 2SA1175
Q311 2SC2785
Q310 2SC2785
Q306 2SA1175
Q703 2SC2278
Q702 2SC2278
Q701 2SC2278
D606 RD6.2E-N2
Q605 2SA1175
D607 1SS119
D605 1SS119
D604 GP08D
D653 V19C
D603 ERD28-06S
D608 RGP10G
D609 ERC25-06S
Q601 2SC3153
IC551 μPC1378H
D551 GP08D
IC851 NJM7812B
D856 RD6.2E-N1
D853 V19C
D852 V30N
D851 RH1A
D855 V19E
D801 GP08D
D802 GP08D
Q806 2SC2785
D501 1SS119
Q205 2SD795A
D205 RD13E-B2Z
IC202 μPC1241H
D206 RD6.2EN1
Q801 2SC2688
Q802 2SD1398
Q804 2SA1175
Q805 2SC2785
Q803 2SD774
D804 RD7.5E-B2
EJ (JACK)
HVR
DY
C (R.G.B) OUT

— S2 Board —

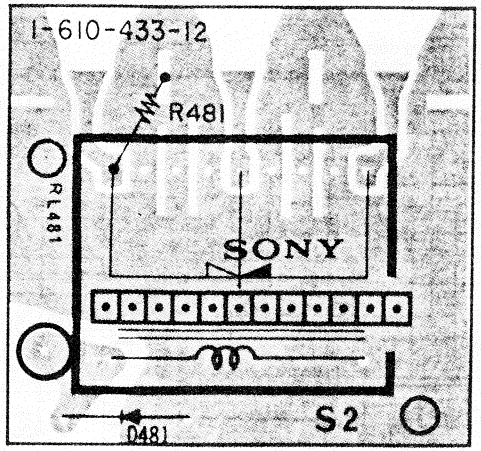

— M1 BOARD —

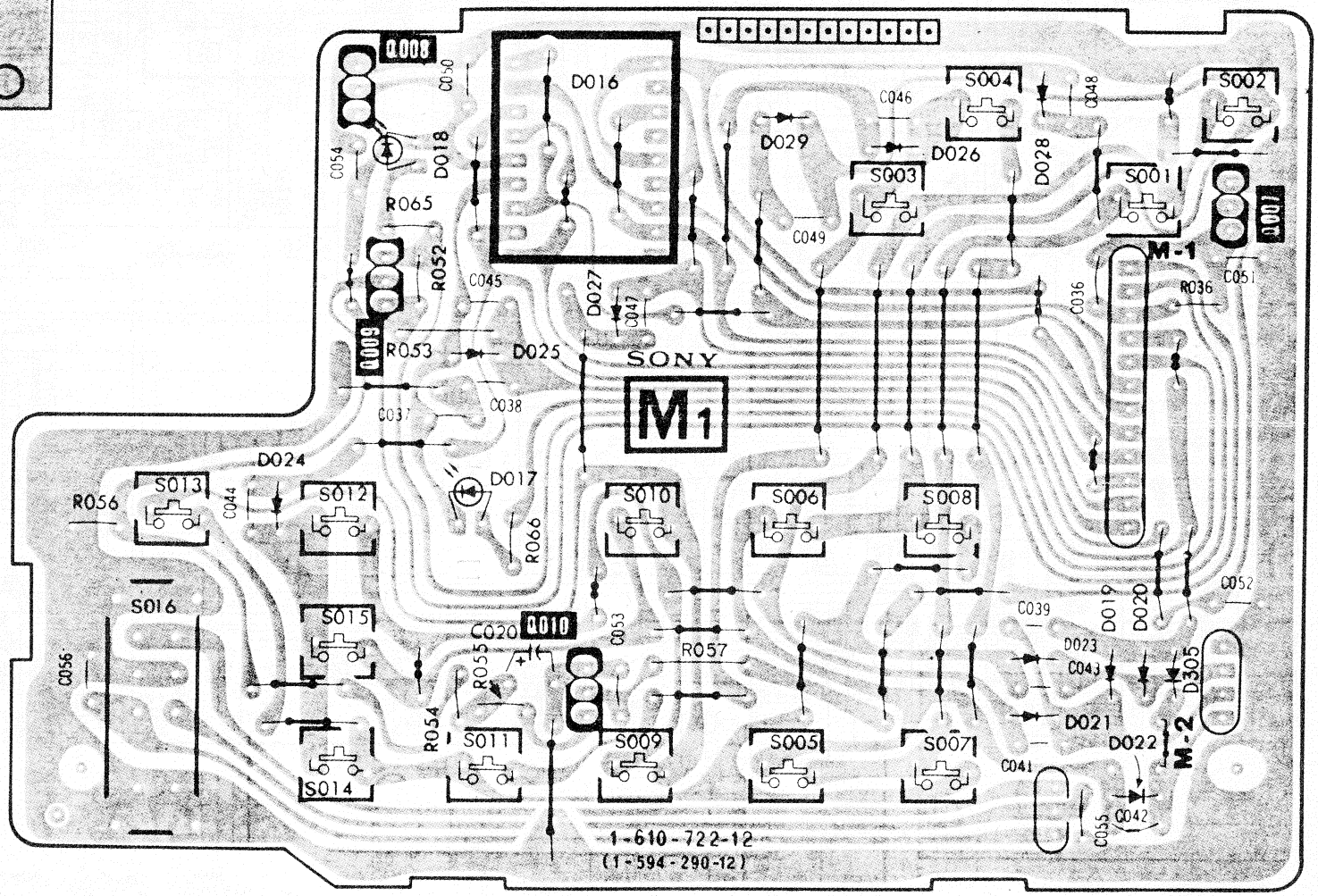

— M2 Board —

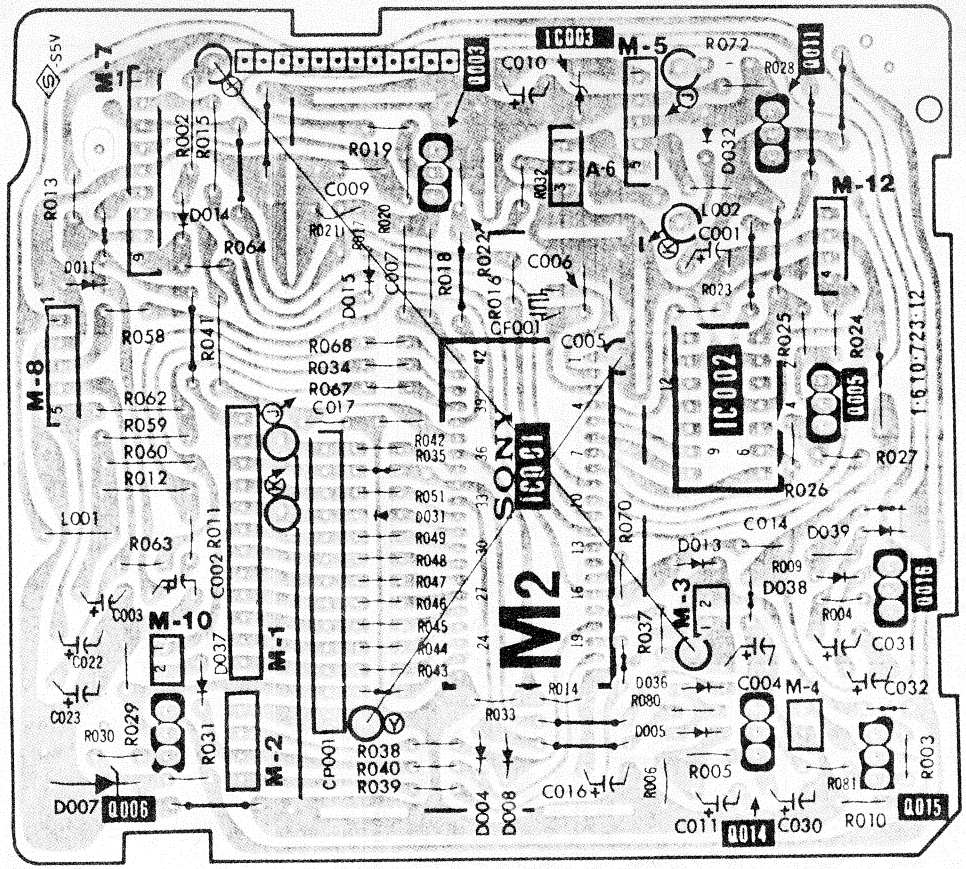

— C BOARD —

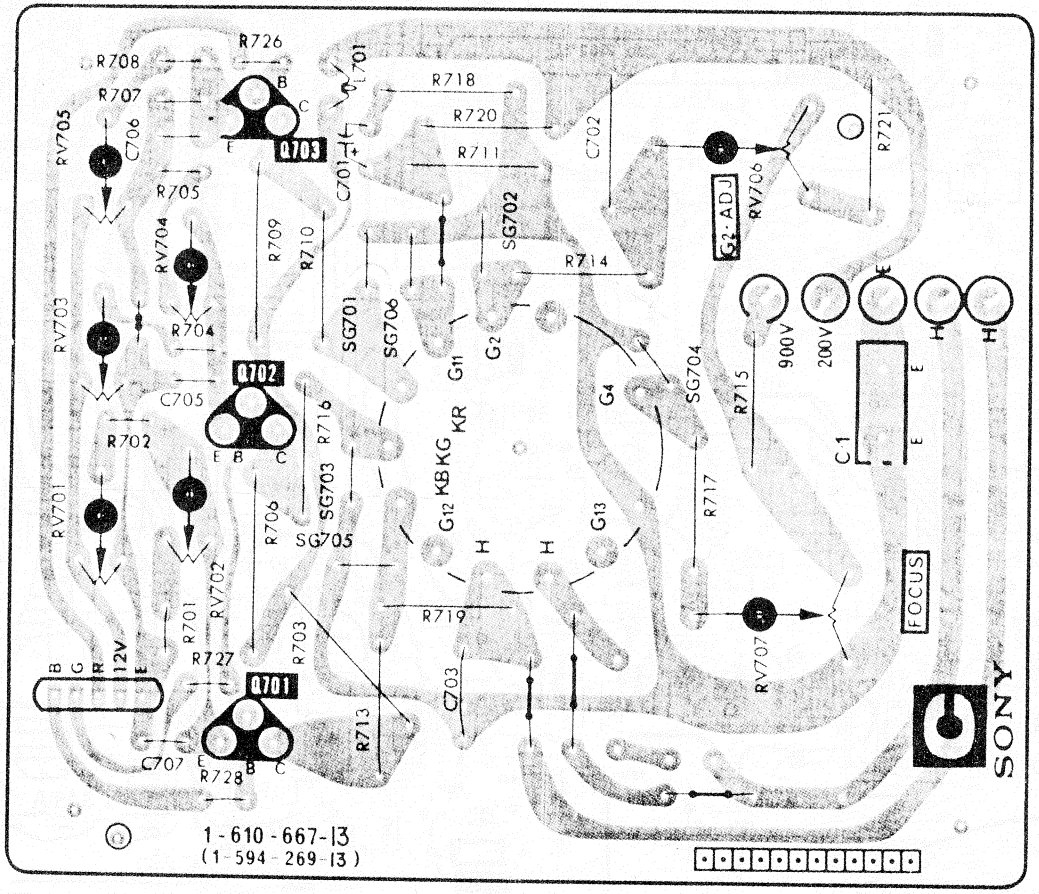

— A Board —

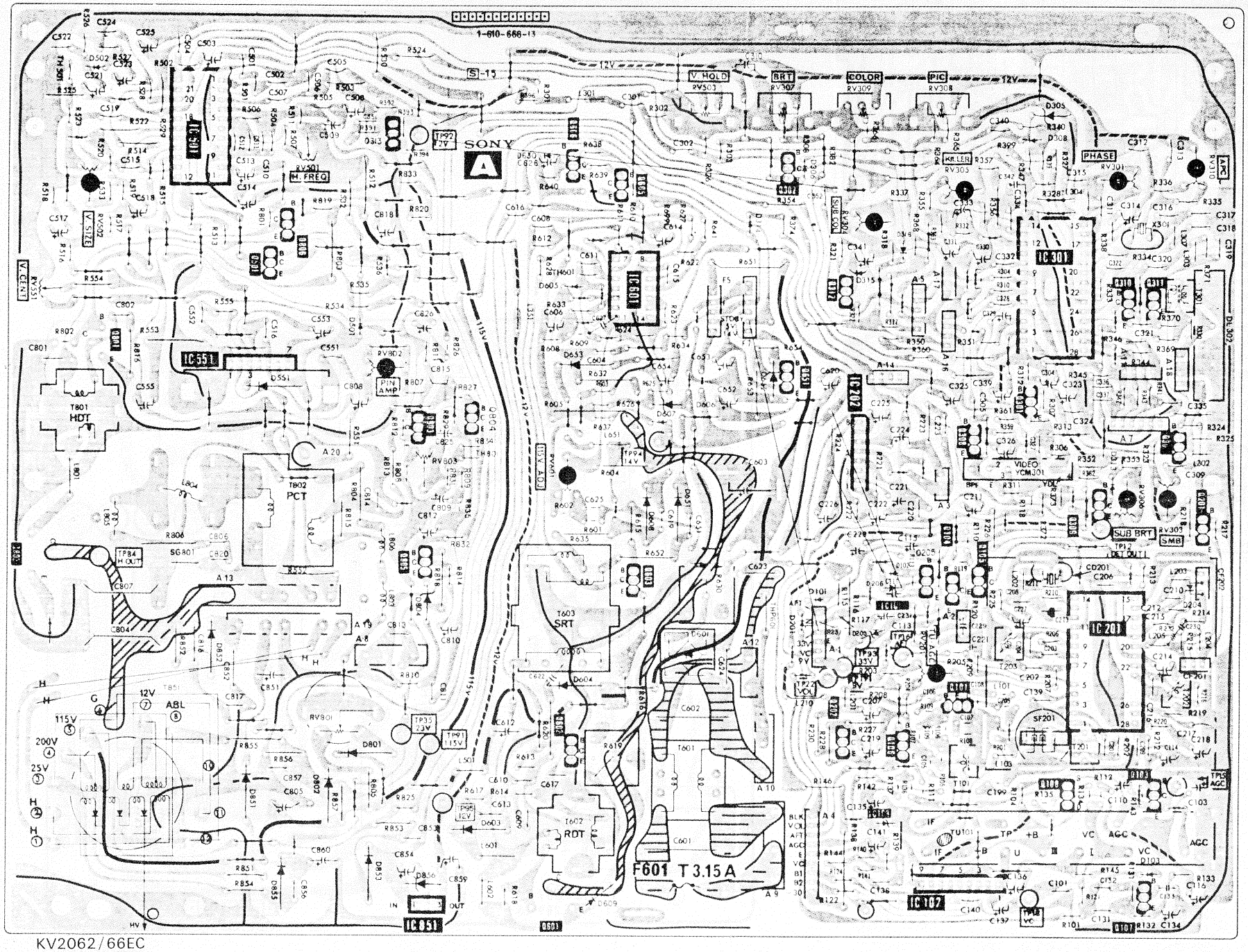

IC, Q	D	ADJ	TP
	502		
		RV307	
	305	RV503	
IC501	308		
313			
606 302		RV501	
605	306	RV502 RV310	
		RV301	
		RV305	
	314	RV304	
	316		
501 806			
IC301			
IC601	315	RV551	
312,310,311			
801	501		
	605		
IC551	653		
	652	RV802	
651	551		
301	606		
804	607		
803			
308 306			
IC202		RV803	94
		RV601	
	313		
		RV306,RV303	
309	608		
201			12
802			
			84
805			
205 603	651 204		
	804,206		
	205 201		
IC201	852		16
	601	RV201	19
	604		22
		RV801	
			35
202,			91
602	801		
	851		95 15
103	802		
IC103			
	603		
	103		
	853		
IC102	855,856		
601			
IC851	609		
107			

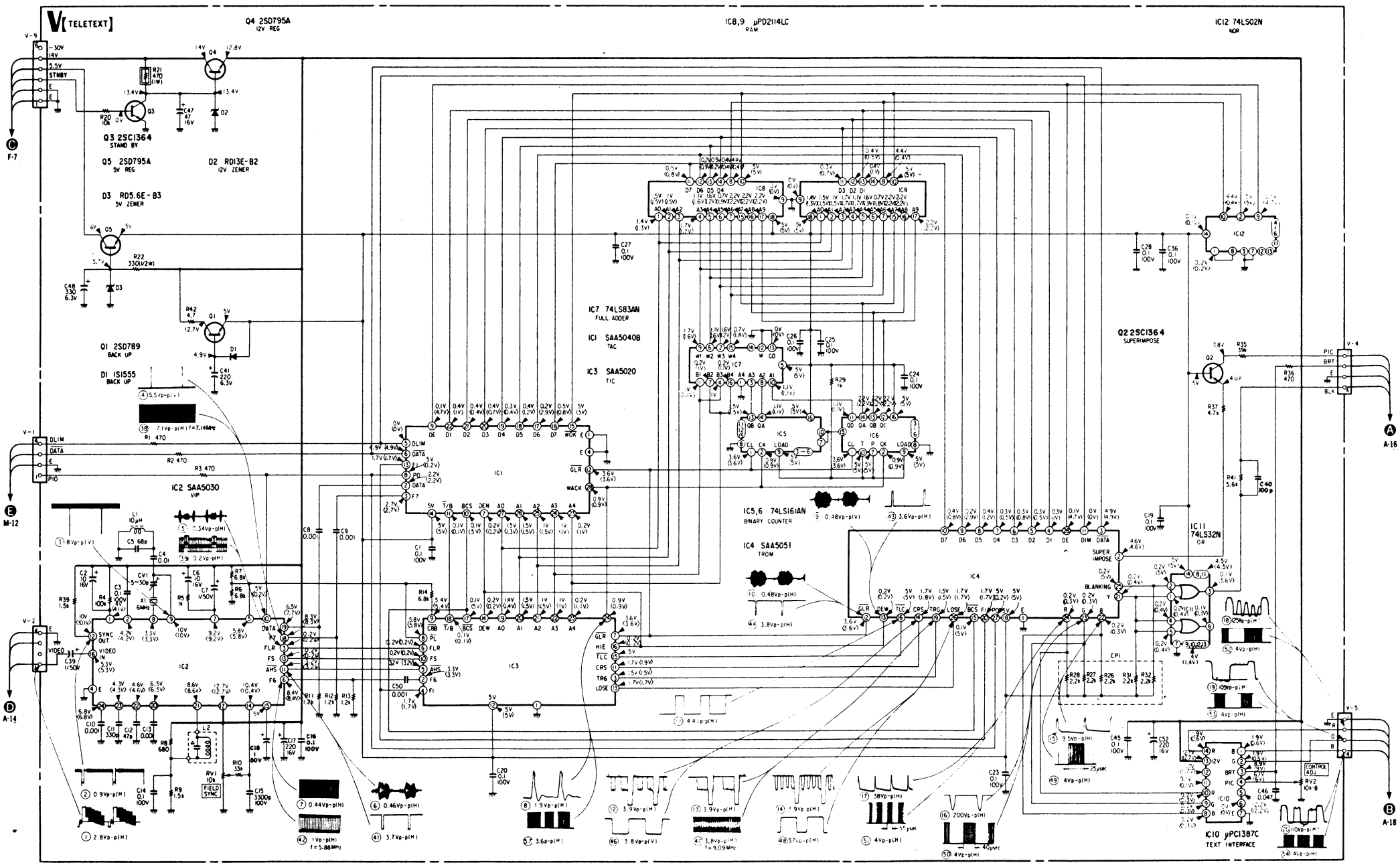
V[TELETEXT]
Q4 2SD795A
12V REG
IC8,9 μPD2114LC
RAM
IC12 74LS02N
NOR
Q3 2SC1364
STAND BY
Q5 2SD795A
5V REG
D2 RD13E-B2
12V ZENER
D3 RD5.6E-B3
5V ZENER
Q1 2SD789
BACK UP
D1 1S1555
BACK UP
IC7 74LS83AN
FULL ADDER
IC1 SAA5040B
TAC
IC3 SAA5020
TIC
Q2 2SC1364
SUPERIMPOSE
IC2 SAA5030
VIP
IC5,6 74LS161AN
BINARY COUNTER
IC4 SAA5051
TROM
IC11 74LS32N
OR
IC10 μPC1387C
TEXT INTERFACE
CONTROL ADJ
FIELD SYNC
SUPER IMPOSE
BLANKING
F-7
M-12
A-14
A-16
A-18

EXPLODED VIEWS

NOTE:
- Items with no part number and no description are not stocked because they are seldom required for routine service.
- The construction parts of an assembled part are indicated with a collation number in the remark column.
- Items marked " ♠ " are not stocked since they are seldom required for routine service. Some delay should be anticipated when ordering these items.

1. BACK COVER

■ : TA, BV3x8 7-685-646-71
● : TA, BV3x12 7-685-648-71

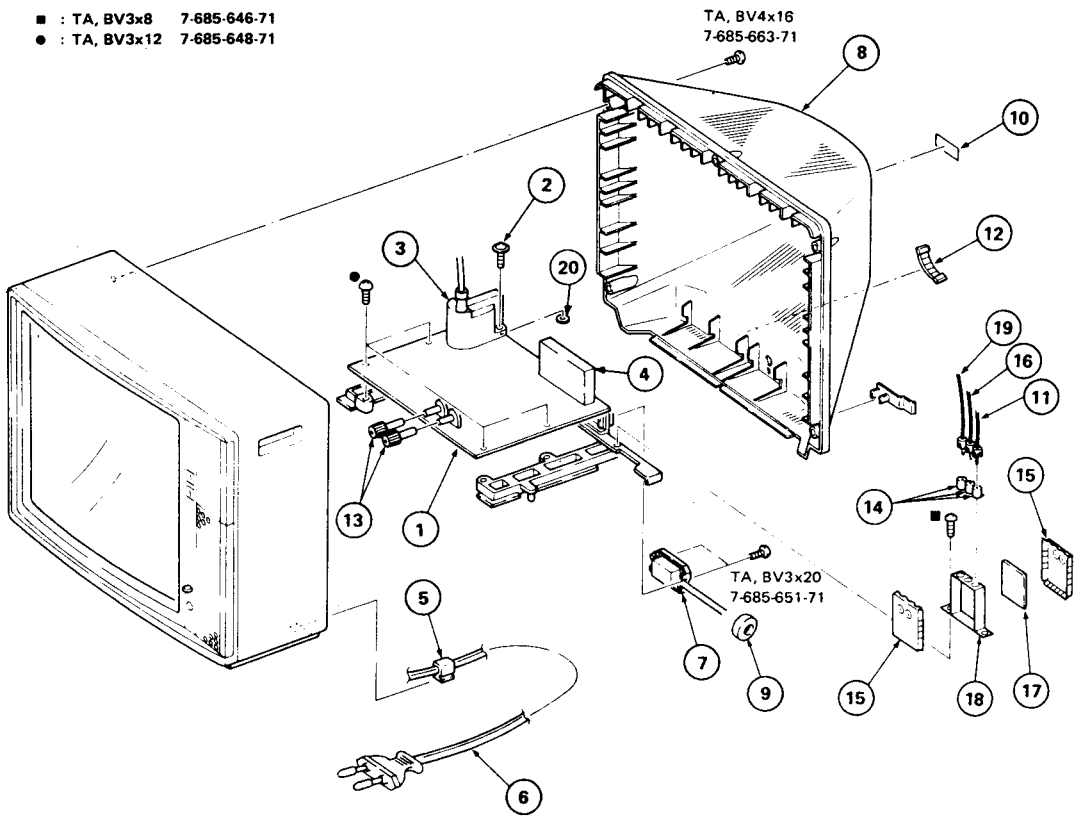

No.	Part No.	Description	Remark
1	♠:A-1295-772-A	A BAORD, COMPLETE	
2	4-302-428-00	HEAD, WASHER, TAPPING SCREW	
3	⚠1-439-303-31	FBT ASSY	
4	⚠1-463-421-21	TUNER, ET (BT-883)	
5	⚠4-022-115-00	HOLDER, AC CORD	
6	⚠1-534-817-XX	CORD, POWER	
7	⚠1-536-683-21	CONNECTOR, COAXIAL ANTENNA	
8	X-4368-904-0	COVER ASSY, BACK	
9	1-543-171-00	CORE, RING	
10	♠:4-368-902-00	LABEL, MODEL NUMBER	
11	1-557-024-00	CABLE (WITH PIN)	
12	3-701-007-00	BAND, BINDING	
13	4-365-226-01	KNOB, VR	
14	♠:1-507-900-00	JACK	
15	♠:4-368-114-00	CASE (LID), RELAY	
16	♠:1-557-009-21	CABLE, P-P	
17	♠:1-610-433-00	S2 BOARD	
18	♠:4-368-115-00	CASE (MAIN), RELAY	
19	♠:1-557-024-00	CABLE (WITH PIN)	
20	3-564-542-11	WASHER, FIBER	

2. PICTURE TUBE

▲ : TA, BV4x12 7-685-661-14

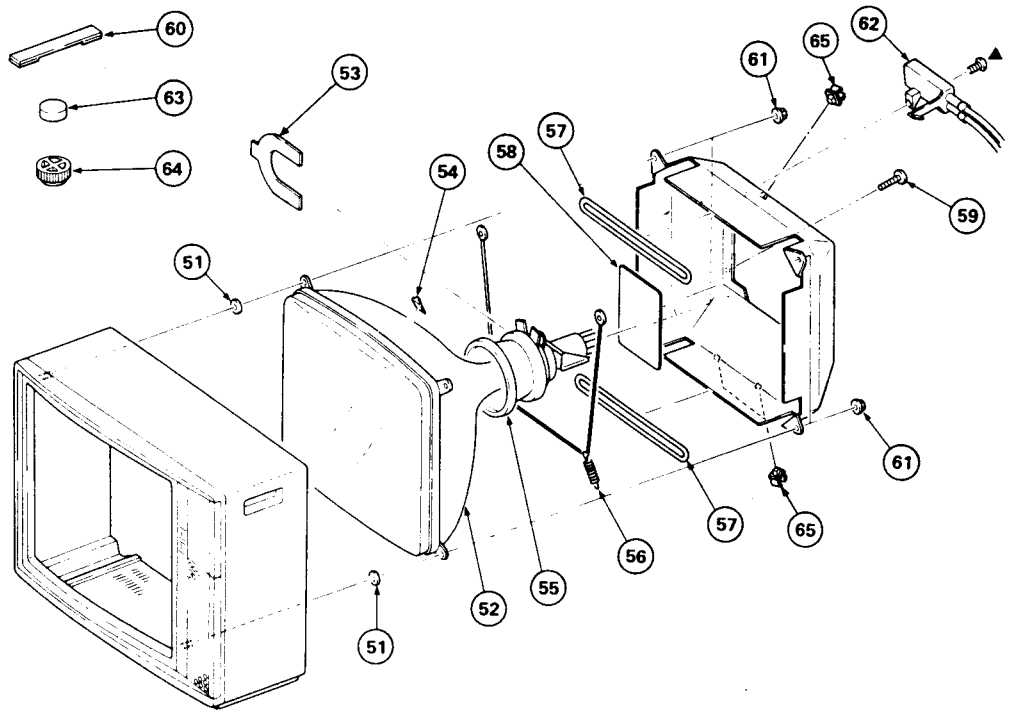

No.	Part No.	Description	Remark
51	4-348-567-00	WASHER, CRT POSITION	
52	⚠8-737-251-05	CRT (A49JHT00X)	
53	1-452-146-00	MAGNET, BMC	
54	3-703-003-00	SPACER, DY	
55	⚠1-451-204-61	DEFLECTION YOKE (SY-1088)	
56	4-303-774-XX	SPRING	
57	⚠1-426-087-71	COIL, DEGAUSSING	
58	♠:A-1330-463-A	C BOARD, COMPLETE	
59	4-305-021-00	SCREW (+BV 3X8), TAPPING	
60	X-4308-815-0	PERMALLOY ASSY, CONVERGENCE	
61	4-306-034-00	FLANGE NUT, (B) 5MM	
62	⚠1-228-482-00	RESISTOR ASSY, HIGH-VOLTAGE	
63	1-452-032-00	MAGNET, DISK; 10MM ϕ	
64	1-452-094-00	MAGNET, ROTATABLE DISK; 15MM ϕ	
65	♠:4-322-922-00	HOLDER, COIL, DEGAUSSER	

3. BEZEL ASSY

● : TA, BV3x12 7-685-648-71
▲ : TA, BV4x12 7-685-661-14

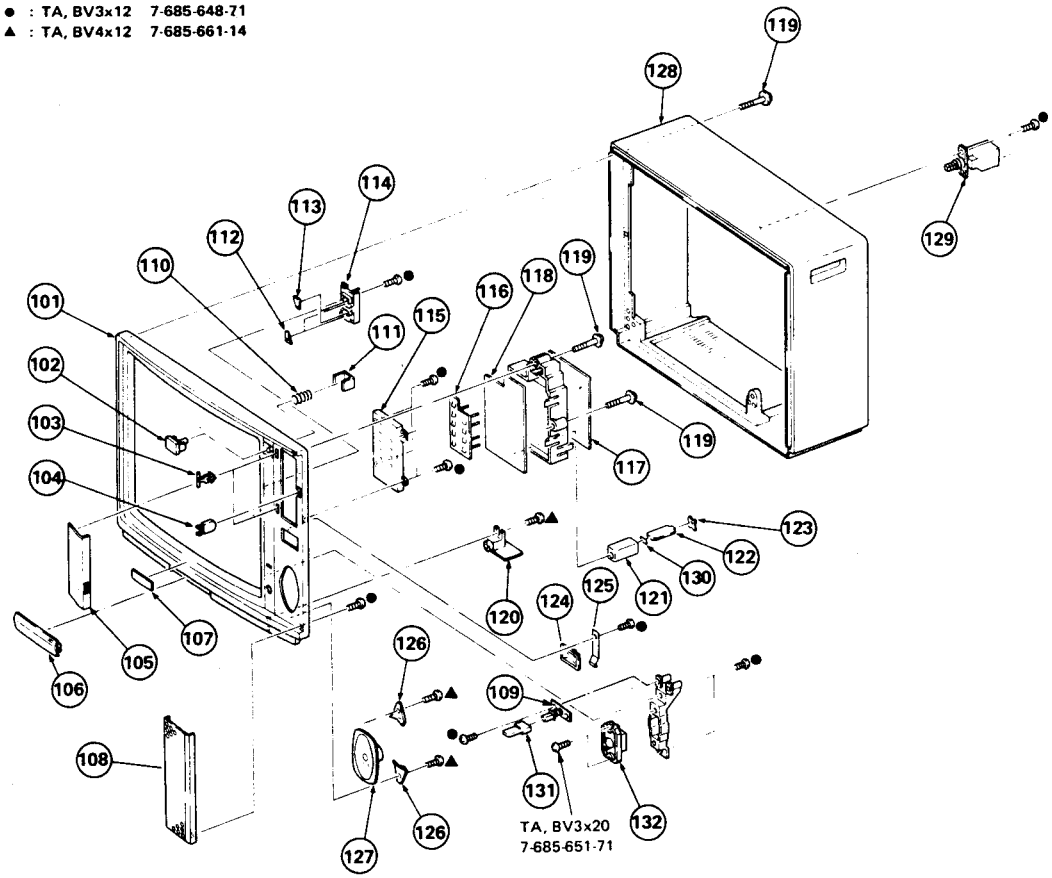

No.	Part No.	Description	Remark
101	X-4368-901-3	BEZEL ASSY	102-108, 110-116
	X-4368-908-1	BEZEL ASSY (WHITE)	
102	4-367-205-00	BUTTON (A), POWER	
103	3-662-365-00	SHAFT (S), DOOR	
104	3-703-574-00	RETAINER, DOOR	
105	X-4368-903-0	DOOR ASSY, CONTROL	
	X-4368-907-1	DOOR ASSY, CONTROL (WHITE)	
106	4-367-213-00	DOOR, SUB CONTROL	
	4-367-213-11	DOOR, SUB CONTROL (WHITE)	
107	3-701-912-00	EMBLEM, SONY, (LARGE)	
108	4-367-232-00	GRILLE, SPEAKER	
	4-367-232-11	GRILLE, SPEAKER (WHITE)	
109	1-552-806-21	SWITCH, PUSH	
110	4-367-209-00	SPRING, COMPRESSION	
111	4-367-208-00	BUTTON (B), POWER	
112	4-367-902-00	BUTTON (A)	
113	4-367-903-00	BUTTON (B)	
114	*♦:4-367-913-00	HOLDER, CHANNEL BUTTON	
115	4-367-910-00	PANEL, CONTROL	
116	4-367-909-00	BUTTON, MULTI	
117	♦:A-1301-519-A	M2 BOARD, COMPLETE	
118	♦:1-610-722-00	M1 BOARD	
119	4-319-520-00	SCREW, SPECIAL (+PW4X30)	
120	♦:1-610-851-00	EJ BOARD	
121	♦:4-342-117-00	CASE SHIELD (MAIN), R	
122	♦:1-606-794-00	N BOARD	
123	♦:4-342-118-00	LID, SHIELD CASE, R	
124	8-927-129-00	SPEAKER UNIT (040T004)	
125	4-367-202-00	SPRING	
126	♦:4-338-106-00	HOLDER, SPEAKER	
127	8-927-133-00	SPEAKER UNIT (120E004)	
128	X-4368-902-0	CABINET ASSY (BLACK)	
	X-4367-907-0	CABINET ASSY (WALNUT)	
	X-4367-902-0	CABINET ASSY (ROSE)	
	X-4368-902-2	CABINET ASSY (WHITE)	
129	⚠.1-553-225-00	SWITCH, PUSH	
130	♦:4-333-624-00	FILM (N), SPECIAL	
131	4-352-918-00	BUTTON, LOCK, CHANNEL	
132	⚠.1-536-683-21	CONNECTOR, COAXIAL ANTENNA	

ELECTRICAL PARTS LIST

A

• Items marked " ♦ " are not stocked since they are seldom required for routine service. Some delay should be anticipated when ordering these items.

CAPACITORS
• MF : μF, PF : μμF

RESISTORS
• All resistors are in ohms
• F : nonflammable

COILS
• MMH : mH, UH : μH

• All variable and adjustable resistors have characteristic curve B, unless otherwise noted.

When indicating parts by reference number, please include the board name.

Ref.No.	Part No.	Description	Remark
	♦:A-1295-772-A	A BOARD, COMPLETE	
		**********	
	1-235-268-00	MODULE	
	4-302-428-00	HEAD, WASHER, TAPPING SCREW	
	4-363-414-00	SPACER, MICA	
	♦:4-365-811-00	CASE (MAIN), SHIELD, VIF	
	♦:4-365-812-00	LID, UPPER, SHIELD CASE, VIF	
	♦:4-365-813-00	LID, BOTTOM, SHIELD CASE, VIF	
	♦:4-367-226-00	HOLDER, H OUT	
	♦:4-367-227-00	HOLDER, REGULATOR OUT	
		CONNECTOR	
A3	♦:1-560-123-00	PLUG, CONNECTOR (2.5MM) 3P	
A4	♦:1-560-129-00	PLUG, CONNECTOR (2.5MM) 9P	
A5	♦:1-560-125-00	PLUG, CONNECTOR (2.5MM) 5P	
A7	♦:1-560-126-00	PLUG, CONNECTOR (2.5MM) 6P	
A8	♦:1-508-765-00	3P PLUG (M)	
A9	♦:1-506-349-21	3P PLUG (L)	
A10	♦:1-508-765-00	3P PLUG (M)	
A11	♦:1-560-124-00	PLUG, CONNECTOR (2.5MM PITCH)	
A12	♦:1-508-786-00	2P PLUG (M)	
A13	♦:1-564-038-00	CONNECTOR PLUG, DY (MINI) 6P	
A14	♦:1-560-124-00	PLUG, CONNECTOR (2.5MM PITCH)	
A16	♦:1-560-124-00	PLUG, CONNECTOR (2.5MM PITCH)	
A19	♦:1-508-768-00	6P PLUG	
A20	♦:1-508-784-00	1P PLUG	
F5	♦:1-560-125-00	PLUG, CONNECTOR (2.5MM) 5P	
F7	♦:1-560-126-00	PLUG, CONNECTOR (2.5MM PITCH)	
		CAPACITOR	
C101	1-106-220-00	MYLAR 0.1MF 10% 100V	
C114	1-123-330-00	ELECT 22MF 20% 16V	
C116	1-123-323-00	ELECT 470MF 20% 16V	
C131	1-106-216-00	MYLAR 0.068MF 10% 100V	
C132	1-106-216-00	MYLAR 0.068MF 10% 100V	
C133	1-102-233-00	CERAMIC 33PF 10% 500V	
C134	1-123-318-00	ELECT 33MF 20% 16V	
C135	1-123-318-00	ELECT 33MF 20% 16V	
C136	1-123-356-00	ELECT 10MF 20% 16V	
C137	1-123-356-00	ELECT 10MF 20% 16V	
C138	1-106-220-00	MYLAR 0.1MF 10% 100V	
C139	1-102-125-00	CERAMIC 0.0047MF 10% 50V	
C140	1-106-220-00	MYLAR 0.1MF 10% 100V	
C141	1-123-369-00	ELECT 4.7MF 20% 50V	
C201	1-102-125-00	CERAMIC 0.0047MF 10% 50V	
C202	1-102-125-00	CERAMIC 0.0047MF 10% 50V	
C203	1-102-513-00	CERAMIC 18PF 5% 50V	
C204	1-102-525-00	CERAMIC 68PF 5% 50V	
C206	1-102-125-00	CERAMIC 0.0047MF 10% 50V	
C207	1-123-318-00	ELECT 33MF 20% 16V	
C208	1-101-005-00	CERAMIC 0.022MF 50V	
C209	1-102-125-00	CERAMIC 0.0047MF 10% 50V	
C210	1-102-824-00	CERAMIC 470PF 5% 50V	
C211	1-123-381-00	ELECT 2.2MF 20% 50V	
C212	1-161-059-00	CERAMIC 0.047MF 10% 50V	
C213	1-123-021-00	ELECT 0.47MF 30% 50V	
C214	1-123-318-00	ELECT 33MF 20% 16V	
C215	1-161-059-00	CERAMIC 0.047MF 10% 50V	
C216	1-102-525-00	CERAMIC 68PF 5% 50V	
C217	1-161-051-00	CERAMIC 0.01MF 10% 50V	
C218	1-123-379-00	ELECT 0.47MF 20% 50V	
C219	1-123-323-00	ELECT 470MF 20% 16V	
C220	1-102-119-00	CERAMIC 0.0015MF 10% 50V	
C222	1-123-381-00	ELECT 2.2MF 20% 50V	
C223	1-106-220-00	MYLAR 0.1MF 10% 100V	
C224	1-123-323-00	ELECT 470MF 20% 16V	
C225	1-123-332-00	ELECT 47MF 20% 16V	
C226	1-123-324-00	ELECT 1000MF 20% 16V	
C227	1-123-380-00	ELECT 1MF 20% 50V	
C229	1-123-321-00	ELECT 220MF 20% 16V	
C230	1-102-850-00	CERAMIC 56PF 5% 50V	
C231	1-123-333-00	ELECT 100MF 20% 16V	
C301	1-101-888-00	CERAMIC 68PF 5% 50V	
C302	1-101-004-00	CERAMIC 0.01MF 50V	
C304	1-123-356-00	ELECT 10MF 20% 16V	
C305	1-101-004-00	CERAMIC 0.01MF 50V	
C309	1-101-004-00	CERAMIC 0.01MF 50V	
C310	1-123-322-00	ELECT 330MF 20% 16V	
C311	1-102-850-00	CERAMIC 56PF 5% 50V	
C312	1-106-212-00	MYLAR 0.047MF 10% 100V	
C313	1-106-212-00	MYLAR 0.047MF 10% 100V	
C314	1-123-379-00	ELECT 0.47MF 20% 50V	
C315	1-102-887-00	CERAMIC 47PF 5% 50V	
C316	1-102-852-00	CERAMIC 47PF 5% 50V	
C317	1-102-852-00	CERAMIC 47PF 5% 50V	
C318	1-102-513-00	CERAMIC 18PF 5% 50V	
C319	1-101-884-00	CERAMIC 56PF 5% 50V	
C320	1-101-004-00	CERAMIC 0.01MF 50V	
C321	1-101-004-00	CERAMIC 0.01MF 50V	
C322	1-102-618-00	CERAMIC 33PF 5% 50V	
C323	1-123-332-00	ELECT 47MF 20% 16V	
C324	1-106-212-00	MYLAR 0.047MF 10% 100V	
C325	1-123-379-00	ELECT 0.47MF 20% 50V	
C326	1-123-382-00	ELECT 3.3MF 20% 50V	
C327	1-106-208-00	MYLAR 0.033MF 10% 100V	
C328	1-102-951-00	CERAMIC 15PF 5% 50V	
C329	1-123-356-00	ELECT 10MF 20% 16V	
C330	1-123-380-00	ELECT 1MF 20% 50V	
C331	1-123-382-00	ELECT 3.3MF 20% 50V	
C332	1-101-004-00	CERAMIC 0.01MF 50V	
C333	1-123-380-00	ELECT 1MF 20% 50V	
C334	1-106-228-00	MYLAR 0.22MF 10% 100V	
C335	1-102-947-00	CERAMIC 10PF 5% 50V	
C336	1-102-947-00	CERAMIC 10PF 5% 50V	
C337	1-102-947-00	CERAMIC 10PF 5% 50V	

Ref.No.	Part No.	Description			Remark
C339	1-123-380-00	ELECT	1MF	20%	50V
C340	1-101-888-00	CERAMIC	68PF	5%	50V
C341	1-123-356-00	ELECT	10MF	20%	16V
C342	1-102-973-00	CERAMIC	100PF	5%	50V
C351	1-102-978-00	CERAMIC	220PF	5%	50V
C352	1-102-125-00	CERAMIC	0.0047MF	10%	50V
C501	1-106-212-00	MYLAR	0.047MF	10%	100V
C502	1-108-614-91	MYLAR	0.001MF	10%	100V
C503	1-123-380-00	ELECT	1MF	20%	50V
C504	1-108-616-91	MYLAR	0.0015MF	10%	100V
C505	1-102-989-00	CERAMIC	68PF	5%	500V
C506	1-106-196-00	MYLAR	0.01MF	10%	100V
C507	1-108-630-91	MYLAR	0.022MF	10%	100V
C508	1-123-380-00	ELECT	1MF	20%	50V
C509	1-123-380-00	ELECT	1MF	20%	50V
C510	1-108-630-91	MYLAR	0.022MF	10%	100V
C511	1-106-180-00	MYLAR	0.0022MF	5%	100V
C512	1-129-794-00	FILM	0.0033MF	5%	100V
C513	1-123-380-00	ELECT	1MF	20%	50V
C514	1-123-321-00	ELECT	220MF	20%	16V
C515	1-108-812-91	MYLAR	0.047MF	5%	50V
C516	1-108-627-91	MYLAR	0.012MF	10%	100V
C517	1-123-356-00	ELECT	10MF	20%	25V
C518	1-131-351-00	TANTALUM	4.7MF	20%	35V
C519	1-130-640-00	FILM	0.47MF	5%	50V
C521	1-123-380-00	ELECT	1MF	20%	50V
C522	1-106-196-00	MYLAR	0.01MF	10%	100V
C523	1-123-380-00	ELECT	1MF	20%	50V
C524	1-106-210-00	MYLAR	0.039MF	10%	100V
C525	1-123-322-00	ELECT	330MF	20%	16V
C551	1-108-630-91	MYLAR	0.022MF	10%	100V
C552	1-102-228-00	CERAMIC	470PF	10%	500V
C553	1-123-360-00	ELECT	100MF	20%	50V
C555	1-123-336-00	ELECT	470MF	20%	25V
C601	**⚠1-108-745-62**	**MYLAR**	**0.22MF**	**20%**	**300V**
C602	1-108-747-00	MYLAR	0.1MF	20%	300V
C603	1-125-318-00	ELECT(BLOCK)	220MF	20%	400V
C604	1-123-021-00	ELECT	0.47MF	30%	50V
C606	1-123-381-00	ELECT	2.2MF	20%	50V
C608	1-108-630-91	MYLAR	0.022MF	10%	100V
C609	1-102-030-00	CERAMIC	330PF	10%	500V
C610	1-108-622-91	MYLAR	0.0047MF	10%	100V
C611	1-102-112-00	CERAMIC	330PF	10%	50V
C612	1-123-024-00	ELECT	33MF		160V
C613	1-102-249-00	CERAMIC	680PF	20%	2KV
C614	1-123-356-00	ELECT	10MF	20%	16V
C615	1-106-180-00	MYLAR	0.0022MF	5%	100V
C616	1-101-810-00	CERAMIC	100PF	5%	500V
C617	1-102-030-00	CERAMIC	330PF	10%	500V
C619	1-102-030-00	CERAMIC	330PF	10%	500V
C620	1-123-324-00	ELECT	1000MF	20%	16V
C622	1-121-999-00	ELECT	10MF		160V
C623	1-161-964-00	CERAMIC	0.0047MF		250V

Ref.No.	Part No.	Description			Remark
C624	1-161-964-00	CERAMIC	0.0047MF		250V
C625	1-102-030-00	CERAMIC	330PF	10%	500V
C626	1-123-379-00	ELECT	0.47MF	20%	50V
C627	1-102-836-00	CERAMIC	470PF	10%	50V
C651	1-102-030-00	CERAMIC	330PF	10%	500V
C652	1-123-324-00	ELECT	1000MF	20%	16V
C653	1-123-330-00	ELECT	22MF	20%	16V
C654	1-123-357-00	ELECT	22MF	20%	50V
C801	1-106-385-00	MYLAR	0.056MF	10%	200V
C802	1-102-038-00	CERAMIC	0.001MF		500V
C804	1-136-138-00	FILM	0.0115MF	3%	2KV
C805	1-123-024-00	ELECT	33MF		160V
C806	1-102-212-00	CERAMIC	820PF	10%	500V
C807	1-136-133-00	FILM	0.43MF	5%	400V
C808	1-123-330-00	ELECT	22MF	20%	25V
C809	1-123-331-00	ELECT	33MF	20%	25V
C810	1-123-380-00	ELECT	1MF	20%	50V
C811	1-106-200-00	MYLAR	0.015MF	10%	100V
C812	1-123-357-00	ELECT	22MF	20%	50V
C813	1-108-620-91	MYLAR	0.0033MF	10%	100V
C814	1-106-196-00	MYLAR	0.01MF	10%	100V
C815	1-108-622-91	MYLAR	0.0047MF	10%	100V
C816	1-161-961-00	CERAMIC	0.0022MF	10%	3KV
C817	1-106-212-00	MYLAR	0.047MF	10%	100V
C818	1-123-380-00	ELECT	1MF	20%	50V
C820	1-108-625-91	MYLAR	0.0082MF	10%	100V
C825	1-123-380-00	ELECT	1MF	20%	50V
C851	1-123-005-00	ELECT	22MF		250V
C852	1-102-223-00	CERAMIC	0.0047MF	10%	2KV
C853	1-102-038-00	CERAMIC	0.001MF		500V
C854	1-124-037-00	ELECT	220MF	20%	25V
C856	1-102-038-00	CERAMIC	0.001MF		500V
C857	1-108-630-91	MYLAR	0.022MF	10%	100V
C859	1-123-973-00	ELECT	100MF	20%	16V
C860	1-123-349-00	ELECT	1000MF	20%	35V

DISCRIMINATOR

CD201	1-404-473-00	DISCRIMINATOR, CERAMIC

FILTER

CF201	1-404-134-00	TRAP, CERAMIC (5.5MHZ)
CF202	1-567-099-00	FILTER, CERAMIC

DIODE

			Remark
D103	8-719-911-19	DIODE 1SS119	
D201	8-719-911-19	DIODE 1SS119	
D204	8-719-101-51	DIODE RD5.1E-L3	
D205	8-719-100-68	DIODE RD13E-B2	
D206	8-719-102-73	DIODE RD6.2E-N1	
D305	8-719-100-22	DIODE RD4.3E-B1	
D306	8-719-911-19	DIODE 1SS119	
D308	8-719-911-19	DIODE 1SS119	
D313	8-719-911-19	DIODE 1SS119	
D314	8-719-911-19	DIODE 1SS119	
D315	8-719-911-19	DIODE 1SS119	
D316	8-719-911-19	DIODE 1SS119	
D501	8-719-911-19	DIODE 1SS119	
D502	8-719-911-19	DIODE 1SS119	
D551	8-719-911-55	DIODE U05G	
D601	8-719-503-06	DIODE S3WB60Z	
D603	8-719-928-08	DIODE ERD28-08	
D604	8-719-911-55	DIODE U05G	
D605	8-719-911-19	DIODE 1SS119	
D606	8-719-102-74	DIODE RD6.2E-N2	
D607	8-719-911-19	DIODE 1SS119	
D608	8-719-924-06	DIODE ERC24-06S	
D609	8-719-925-06	DIODE ERC25-06S	
D651	8-719-982-04	DIODE ERB81-004	
D652	8-719-102-71	DIODE RD5.6E-N2	
D653	8-719-901-93	DIODE V19E	
D801	8-719-911-55	DIODE U05G	
D802	8-719-911-55	DIODE U05G	
D804	8-719-100-44	DIODE RD7.5E-B2	
D851	8-719-300-76	DIODE RH1A	
D852	8-719-903-09	DIODE V30N	
D853	8-719-901-93	DIODE V19E	
D855	8-719-901-93	DIODE V19E	
D856	8-719-102-73	DIODE RD6.2E-N1	

DELAY LINE

DL302	1-415-122-31	DELAY LINE, 1H (PAL)

FUSE

F601	**⚠1-532-237-11**	**FUSE, TIME-LAG**
	1-533-087-00	HOLDER, FUSE, F601

IC

IC102	8-759-800-12	IC LA7920
IC103	8-759-157-40	IC UPC574J
IC201	8-752-001-51	IC CX20015A
IC202	8-759-101-77	IC UPC1241H
IC301	8-759-113-65	IC UPC1365C
IC501	8-759-100-60	IC UPC1377C
IC551	8-759-113-78	IC UPC1378H-L
IC601	8-759-100-75	IC UPC1394C
IC851	8-759-700-06	IC NJM7812B

COIL

			Remark
L103	1-408-591-00	MICRO INDUCTOR 1UH	
L201	1-408-602-00	MICRO INDUCTOR 8.2UH	
L202	1-408-607-00	MICRO INDUCTOR 22UH	
L203	1-408-594-00	MICRO INDUCTOR 1.8UH	
L204	1-408-605-00	MICRO INDUCTOR 15UH	
L205	1-408-609-00	MICRO INDUCTOR 33UH	
L210	1-408-226-00	MICRO INDUCTOR 82UH	
L301	1-408-242-00	MICRO INDUCTOR 10MMH	
L302	1-408-602-00	MICRO INDUCTOR 8.2UH	
L303	1-408-608-00	MICRO INDUCTOR 27UH	
L304	1-408-609-00	MICRO INDUCTOR 33UH	
L307	1-408-942-00	MICRO INDUCTOR 3.3MMH	
L351	1-408-226-00	MICRO INDUCTOR 82UH	
L501	1-459-215-00	CORE COIL	
L601	1-408-300-00	MICRO INDUCTOR 6.8UH	
L602	1-407-365-00	COIL, CHOKE	
L651	1-408-300-00	MICRO INDUCTOR 6.8UH	
L801	1-408-225-00	MICRO INDUCTOR 3.3UH	
L803	1-459-123-00	COIL, DUST CORE(PAC)	
L804	1-459-261-00	COIL, VARIABLE	
L805	1-459-241-00	COIL, HORIZONTAL LINIALITY	
L806	1-459-123-00	COIL, DUST CORE(PAC)	

TRANSISTOR

			Remark
Q103	8-729-204-83	TRANSISTOR 2SA1048GR	
Q107	8-729-245-83	TRANSISTOR 2SC2458	
Q201	8-729-204-83	TRANSISTOR 2SA1048GR	
Q202	8-729-378-84	TRANSISTOR 2SD788	
Q205	8-729-109-53	TRANSISTOR 2SD795A	
Q301	8-729-245-83	TRANSISTOR 2SC2458	
Q302	8-729-204-83	TRANSISTOR 2SA1048GR	
Q306	8-729-204-83	TRANSISTOR 2SA1048GR	
Q308	8-729-245-83	TRANSISTOR 2SC2458	
Q309	8-729-245-83	TRANSISTOR 2SC2458	
Q310	8-729-245-83	TRANSISTOR 2SC2458	
Q311	8-729-245-83	TRANSISTOR 2SC2458	
Q312	8-729-204-83	TRANSISTOR 2SA1048GR	
Q313	8-729-245-83	TRANSISTOR 2SC2458	
Q501	8-729-245-83	TRANSISTOR 2SC2458	
Q601	8-729-801-69	TRANSISTOR 2SC3153	
Q602	8-729-195-82	TRANSISTOR 2SC2958	
Q603	8-729-163-93	TRANSISTOR 2SA639S	
Q605	8-729-204-83	TRANSISTOR 2SA1048GR	
Q606	8-729-245-83	TRANSISTOR 2SC2458	
Q651	8-729-378-84	TRANSISTOR 2SD788	
Q801	8-729-168-82	TRANSISTOR 2SC2688	
Q802	8-729-800-87	TRANSISTOR 2SD1398	
Q803	8-729-177-43	TRANSISTOR 2SD774	
Q804	8-729-204-83	TRANSISTOR 2SA1048GR	
Q805	8-729-245-83	TRANSISTOR 2SC2458	
Q806	8-729-245-83	TRANSISTOR 2SC2458	

RESISTOR

						Remark
R101	1-247-863-00	CARBON	22K	5%	1/6W	
R104	1-247-837-00	CARBON	1.8K	5%	1/6W	
R121	1-247-843-00	CARBON	3.3K	5%	1/6W	
R122	1-247-831-00	CARBON	1K	5%	1/6W	
R124	1-247-831-00	CARBON	1K	5%	1/6W	
R131	1-247-891-00	CARBON	330K	5%	1/6W	
R132	1-247-839-00	CARBON	2.2K	5%	1/6W	
R133	1-247-839-00	CARBON	2.2K	5%	1/6W	

Ref.No.	Part No.	Description				Remark
R138	1-206-451-00	METAL OXIDE	3.3	5%	2W	F
R139	1-247-859-00	CARBON	15K	5%	1/6W	
R140	1-247-855-00	CARBON	10K	5%	1/6W	
R141	1-247-879-00	CARBON	100K	5%	1/6W	
R142	1-247-831-00	CARBON	1K	5%	1/6W	
R144	1-247-879-00	CARBON	100K	5%	1/6W	
R145	1-247-888-00	CARBON	240K	5%	1/6W	
R146	1-213-141-00	METAL OXIDE	680	5%	1W	F
R202	1-247-837-00	CARBON	1.8K	5%	1/6W	
R203	1-247-857-00	CARBON	12K	5%	1/6W	
R204	1-247-857-00	CARBON	12K	5%	1/6W	
R206	1-247-841-00	CARBON	2.7K	5%	1/6W	
R207	1-247-831-00	CARBON	1K	5%	1/6W	
R208	1-247-869-00	CARBON	39K	5%	1/6W	
R209	1-247-895-00	CARBON	470K	5%	1/6W	
R210	1-247-839-00	CARBON	2.2K	5%	1/6W	
R211	1-247-828-00	CARBON	750	5%	1/6W	
R212	1-247-839-00	CARBON	2.2K	5%	1/6W	
R213	1-247-839-00	CARBON	2.2K	5%	1/6W	
R214	1-247-826-00	CARBON	620	5%	1/6W	
R215	1-247-815-00	CARBON	220	5%	1/6W	
R216	1-247-845-00	CARBON	3.9K	5%	1/6W	
R217	1-247-807-00	CARBON	100	5%	1/6W	
R218	1-247-119-00	CARBON	330	5%	1/4W	
R219	1-247-879-00	CARBON	100K	5%	1/6W	
R220	1-247-815-00	CARBON	220	5%	1/6W	
R221	1-247-863-00	CARBON	22K	5%	1/6W	
R222	1-247-831-00	CARBON	1K	5%	1/6W	
R223	1-247-071-00	CARBON	1	5%	1/4W	
R225	1-247-831-00	CARBON	1K	5%	1/6W	
R226	1-246-505-00	CARBON	22K	5%	1/4W	
R227	1-214-731-00	METAL	1.2K	1%	1/4W	
R228	1-214-712-00	METAL	200	1%	1/4W	
R230	1-217-383-00	FUSIBLE	4.7	5%	1/4W	F
R231	1-247-817-00	CARBON	270	5%	1/6W	
R232	1-247-811-00	CARBON	150	5%	1/6W	
R302	1-247-839-00	CARBON	2.2K	5%	1/6W	
R303	1-247-871-00	CARBON	47K	5%	1/6W	
R304	1-247-807-00	CARBON	100	5%	1/6W	
R306	1-247-835-00	CARBON	1.5K	5%	1/6W	
R307	1-247-817-00	CARBON	270	5%	1/6W	
R308	1-247-845-00	CARBON	3.9K	5%	1/6W	
R310	1-247-807-00	CARBON	100	5%	1/6W	
R311	1-247-843-00	CARBON	3.3K	5%	1/6W	
R312	1-247-835-00	CARBON	1.5K	5%	1/6W	
R313	1-247-835-00	CARBON	1.5K	5%	1/6W	
R317	1-247-885-00	CARBON	180K	5%	1/6W	
R318	1-247-849-00	CARBON	5.6K	5%	1/6W	
R321	1-247-859-00	CARBON	15K	5%	1/6W	
R322	1-247-847-00	CARBON	4.7K	5%	1/6W	
R323	1-247-815-00	CARBON	220	5%	1/6W	
R324	1-247-815-00	CARBON	220	5%	1/6W	
R325	1-247-821-00	CARBON	390	5%	1/6W	

Ref.No.	Part No.	Description				Remark
R326	1-247-903-00	CARBON	1M	5%	1/6W	
R327	1-247-851-00	CARBON	6.8K	5%	1/6W	
R328	1-247-839-00	CARBON	2.2K	5%	1/6W	
R330	1-247-821-00	CARBON	390	5%	1/6W	
R332	1-247-877-00	CARBON	82K	5%	1/6W	
R333	1-247-831-00	CARBON	1K	5%	1/6W	
R334	1-247-829-00	CARBON	820	5%	1/6W	
R335	1-247-865-00	CARBON	27K	5%	1/6W	
R336	1-247-865-00	CARBON	27K	5%	1/6W	
R337	1-247-853-00	CARBON	8.2K	5%	1/6W	
R338	1-247-839-00	CARBON	2.2K	5%	1/6W	
R339	1-247-850-00	CARBON	6.2K	5%	1/6W	
R340	1-247-596-00	CARBON	4.7K	5%	1/8W	
R341	1-247-819-00	CARBON	330	5%	1/6W	
R342	1-247-819-00	CARBON	330	5%	1/6W	
R343	1-247-819-00	CARBON	330	5%	1/6W	
R344	1-247-843-00	CARBON	3.3K	5%	1/6W	
R345	1-247-843-00	CARBON	3.3K	5%	1/6W	
R346	1-247-843-00	CARBON	3.3K	5%	1/6W	
R347	1-247-839-00	CARBON	2.2K	5%	1/6W	
R350	1-247-807-00	CARBON	100	5%	1/6W	
R351	1-247-807-00	CARBON	100	5%	1/6W	
R352	1-247-855-00	CARBON	10K	5%	1/6W	
R353	1-247-863-00	CARBON	22K	5%	1/6W	
R354	1-246-465-00	CARBON	470	5%	1/4W	
R355	1-247-835-00	CARBON	1.5K	5%	1/6W	
R356	1-247-843-00	CARBON	3.3K	5%	1/6W	
R357	1-247-887-00	CARBON	220K	5%	1/6W	
R359	1-247-863-00	CARBON	22K	5%	1/6W	
R360	1-247-895-00	CARBON	470K	5%	1/6W	
R361	1-247-857-00	CARBON	12K	5%	1/6W	
R362	1-247-831-00	CARBON	1K	5%	1/6W	
R363	1-247-863-00	CARBON	22K	5%	1/6W	
R364	1-247-868-00	CARBON	36K	5%	1/6W	
R368	1-247-857-00	CARBON	12K	5%	1/6W	
R369	1-247-831-00	CARBON	1K	5%	1/6W	
R370	1-247-831-00	CARBON	1K	5%	1/6W	
R371	1-247-828-00	CARBON	750	5%	1/6W	
R372	1-247-855-00	CARBON	10K	5%	1/6W	
R373	1-246-513-00	CARBON	47K	5%	1/4W	
R374	1-247-855-00	CARBON	10K	5%	1/6W	
R391	1-247-847-00	CARBON	4.7K	5%	1/6W	
R392	1-247-841-00	CARBON	2.7K	5%	1/6W	
R393	1-247-829-00	CARBON	820	5%	1/6W	
R394	1-247-823-00	CARBON	470	5%	1/6W	
R396	1-247-843-00	CARBON	3.3K	5%	1/6W	
R501	1-247-819-00	CARBON	330	5%	1/6W	
R502	1-247-817-00	CARBON	270	5%	1/6W	
R503	1-246-493-00	CARBON	6.8K	5%	1/4W	
R504	1-247-877-00	CARBON	82K	5%	1/6W	
R505	1-247-843-00	CARBON	3.3K	5%	1/6W	
R506	1-247-868-00	CARBON	36K	5%	1/6W	
R507	1-247-857-00	CARBON	12K	5%	1/6W	

Ref.No.	Part No.	Description				Remark
R511	1-247-877-00	CARBON	82K	5%	1/6W	
R512	1-213-158-00	METAL OXIDE	18K	5%	1W	F
R513	1-247-841-00	CARBON	2.7K	5%	1/6W	
R514	1-214-768-00	METAL	43K	1%	1/4W	
R515	1-247-847-00	CARBON	4.7K	5%	1/6W	
R516	1-247-857-00	CARBON	12K	5%	1/6W	
R517	1-247-855-00	CARBON	10K	5%	1/6W	
R518	1-247-842-00	CARBON	3K	5%	1/6W	
R519	1-247-847-00	CARBON	4.7K	5%	1/6W	
R520	1-247-839-00	CARBON	2.2K	5%	1/6W	
R522	1-214-770-00	METAL	51K	1%	1/4W	
R523	1-247-769-00	CARBON	2.7	5%	1/6W	
R524	1-214-781-00	METAL	150K	1%	1/4W	
R525	1-214-760-00	METAL	20K	1%	1/4W	
R526	1-247-873-00	CARBON	56K	5%	1/6W	
R527	1-247-841-00	CARBON	2.7K	5%	1/6W	
R528	1-247-845-00	CARBON	3.9K	5%	1/6W	
R529	1-214-767-00	METAL	39K	1%	1/4W	
R530	1-247-807-00	CARBON	100	5%	1/8W	F
R532	1-246-469-00	CARBON	680	5%	1/4W	
R533	1-247-839-00	CARBON	2.2K	5%	1/6W	
R534	1-247-883-00	CARBON	150K	5%	1/6W	
R535	1-247-879-00	CARBON	100K	5%	1/6W	
R536	1-247-903-00	CARBON	1M	5%	1/6W	
R551	1-247-783-00	CARBON	10	5%	1/8W	F
R552	1-247-226-00	CARBON	270	5%	1/2W	
R553	1-212-363-00	METAL OXIDE	1.8	5%	1W	F
R554	1-246-994-00	CARBON	680	5%	1/8W	F
R555	1-247-795-00	CARBON	33	5%	1/6W	
R601	1-247-879-00	CARBON	100K	5%	1/6W	
R602	1-247-829-00	CARBON	820	5%	1/6W	
R603	1-247-840-00	CARBON	2.4K	5%	1/6W	
R604	1-202-673-00	SOLID	15M	10%	1/2W	
R605	1-214-597-00	METAL OXIDE	100K	5%	2W	F
R608	1-247-865-00	CARBON	27K	5%	1/6W	
R611	1-247-829-00	CARBON	820	5%	1/6W	
R612	1-247-825-00	CARBON	560	5%	1/6W	
R613	1-247-889-00	CARBON	270K	5%	1/6W	
R614	1-247-851-00	CARBON	6.8K	5%	1/6W	
R615	1-247-855-00	CARBON	10K	5%	1/8W	
R616	1-217-193-00	WIREWOUND	0.27	10%	2W	F
R617	1-247-831-00	CARBON	1K	5%	1/6W	
R618	1-247-805-00	CARBON	82	5%	1/6W	
R619	1-205-687-00	CEMENTED	54K	10%	7W	
R620	1-213-159-00	METAL OXIDE	22K	5%	1W	F
R622	1-247-869-00	CARBON	39K	5%	1/6W	
R623	1-247-891-00	CARBON	330K	5%	1/6W	
R624	1-247-871-00	CARBON	47K	5%	1/6W	
R625	1-247-871-00	CARBON	47K	5%	1/6W	
R626	1-247-819-00	CARBON	330	5%	1/6W	
R627	1-247-855-00	CARBON	10K	5%	1/6W	
R628	1-247-873-00	CARBON	56K	5%	1/6W	
R630	1-205-727-00	CEMENTED	2.7	10%	10W	

Ref.No.	Part No.	Description				Remark
R632	1-202-723-00	SOLID	2.2M	10%	1/2W	
R633	1-247-855-00	CARBON	10K	5%	1/6W	
R634	1-247-855-00	CARBON	10K	5%	1/6W	
R635	1-217-371-00	FUSIBLE	0.47	10%	1/4W	F
R637	1-247-823-00	CARBON	470	5%	1/6W	
R638	1-247-871-00	CARBON	47K	5%	1/6W	
R639	1-247-855-00	CARBON	10K	5%	1/6W	
R640	1-247-873-00	CARBON	56K	5%	1/6W	
R641	1-247-879-00	CARBON	100K	5%	1/6W	
R651	1-206-688-00	METAL OXIDE	10K	5%	2W	F
R652	1-217-465-00	FUSIBLE	0.47	5%	1W	F
R653	1-217-383-00	FUSIBLE	4.7	5%	1/4W	F
R654	1-247-821-00	CARBON	390	5%	1/6W	
R801	1-247-809-00	CARBON	120	5%	1/6W	
R803	1-205-642-00	CEMENTED	3.3K	10%	5W	
R804	1-212-372-00	METAL OXIDE	10	5%	1W	F
R805	1-247-839-00	CARBON	2.2K	5%	1/8W	F
R806	1-213-139-00	METAL OXIDE	470	5%	1W	F
R807	1-247-815-00	CARBON	220	5%	1/6W	
R808	1-247-837-00	CARBON	1.8K	5%	1/6W	
R809	1-247-826-00	CARBON	620	5%	1/6W	
R810	1-247-851-00	CARBON	6.8K	5%	1/6W	
R811	1-247-841-00	CARBON	2.7K	5%	1/6W	
R812	1-247-809-00	CARBON	120	5%	1/6W	
R813	1-247-805-00	CARBON	82	5%	1/8W	F
R814	1-247-891-00	CARBON	330K	5%	1/6W	
R815	1-246-481-00	CARBON	2.2K	5%	1/4W	
R816	1-247-135-00	CARBON	1.5K	5%	1/4W	F
R818	1-202-830-00	SOLID	10K		1/2W	
R819	1-247-891-00	CARBON	330K	5%	1/6W	
R820	1-247-847-00	CARBON	4.7K	5%	1/6W	
R825	1-247-879-00	CARBON	100K	5%	1/6W	
R831	1-247-847-00	CARBON	4.7K	5%	1/6W	
R832	1-247-841-00	CARBON	2.7K	5%	1/6W	
R833	1-247-871-00	CARBON	47K	5%	1/6W	
R834	1-247-843-00	CARBON	3.3K	5%	1/6W	
R851	1-210-859-00	CARBON	1.2	5%	1/8W	F
R852	1-247-831-00	CARBON	1K	5%	1/8W	F
R853	1-247-636-00	CARBON	0.47	5%	1/8W	F
R854	1-247-636-00	CARBON	0.47	5%	1/8W	F
R855	1-202-830-00	SOLID	10K		1/2W	
R856	1-246-493-00	CARBON	6.8K	5%	1/4W	
R857	1-214-781-00	METAL	150K	1%	1/4W	

VARIABLE RESISTOR

RV201	1-228-723-00	RES, ADJ, CERAMIC CARBON 4.7K
RV301	1-228-721-00	RES, ADJ, CERAMIC CARBON 2.2K
RV303	1-228-719-00	RES, ADJ, CERAMIC CARBON 470
RV304	1-228-723-00	RES, ADJ, CERAMIC CARBON 4.7K
RV305	1-228-723-00	RES, ADJ, CERAMIC CARBON 4.7K
RV306	1-228-724-00	RES, ADJ, CERAMIC CARBON 10K
RV307	1-228-941-00	RES, VAR, CARBON 10K
RV310	1-228-723-00	RES, ADJ, CERAMIC CARBON 4.7K

Ref.No.	Part No.	Description	Remark
RV501	1-224-251-XX	RES, ADJ, METAL GLAZE 4.7K	
RV502	1-228-717-00	RES, ADJ, CERAMIC CARBON 220	
RV503	1-228-940-00	RES, VAR, CARBON 10K	
RV551	1-224-250-XX	RES, ADJ, METAL GLAZE 2.2K	
RV601	1-228-721-00	RES, ADJ, CERAMIC CARBON 2.2K	
RV801	1-223-102-00	RES, ADJ, WIREWOUND 120	
RV802	1-228-723-00	RES, ADJ, CERAMIC CARBON 4.7K	
RV803	1-228-722-00	RES, ADJ, CERAMIC CARBON 3.3K	
		FILTER	
SF201	1-404-323-00	SAWF (38.9MHZ)	
		SPARK GAP	
SG801	1-519-063-XX	DISCHARGING GAP	
		TRANSFORMER	
T201	1-404-464-00	COIL, VIF	
T202	1-404-465-00	COIL, VIF (MOLD TYPE)	
T203	1-404-465-00	COIL, VIF (MOLD TYPE)	
T301	1-426-121-00	DAT	
T601	1-421-582-00	TRANSFORMER, FERRITE	
T602	1-446-194-00	TRANSFORMER, CHOPPER DRIVE	
T603	1-421-559-00	TRANSFORMER, FERRITE (S.R.T)	
T801	1-437-078-00	TRANSFORMER, HORIZONTAL DRIVE	
T802	1-421-610-00	H.PCT	
		THERMISTOR	
TH501	1-806-213-00	THERMISTOR	
TH601⚠	1-800-945-11	THERMISTOR S-10K	
TH801	1-800-954-00	THERMISTOR S-3K	
THP601⚠	1-806-165-11	THERMISTOR (POSITIVE)	
		CRYSTAL	
X301	1-527-345-00	CRYSTAL, OSC	

****

Ref.No.	Part No.	Description	Remark
♣	1-610-722-00	M1 BOARD ********	
♣	1-526-638-00	SOCKET, IC (9P)	
		CAPACITOR	
C020	1-123-612-00	ELECT 2.2MF 20% 50V	
C036	1-102-112-00	CERAMIC 330PF 10% 50V	
		DIODE	
D016	8-719-908-08	DIODE SL1274	
D017	8-719-812-41	DIODE TLR124	
D018	8-719-800-24	DIODE TLR147	
D019	8-719-901-33	DIODE 1SS133	
D021	8-719-911-19	DIODE 1SS119	
D022	8-719-911-19	DIODE 1SS119	
D023	8-719-911-19	DIODE 1SS119	
D024	8-719-911-19	DIODE 1SS119	
D025	8-719-911-19	DIODE 1SS119	
D026	8-719-911-19	DIODE 1SS119	
D027	8-719-911-19	DIODE 1SS119	
D028	8-719-911-19	DIODE 1SS119	
D029	8-719-911-19	DIODE 1SS119	
		TRANSISTOR	
Q007	8-729-245-83	TRANSISTOR 2SC2458	
Q008	8-729-245-83	TRANSISTOR 2SC2458	
Q009	8-729-204-83	TRANSISTOR 2SA1048GR	
Q010	8-729-245-83	TRANSISTOR 2SC2458	
		RESISTOR	
R036	1-247-847-00	CARBON 4.7K 5% 1/6W	
R052	1-247-863-00	CARBON 22K 5% 1/6W	
R053	1-246-505-00	CARBON 22K 5% 1/4W	
R054	1-247-847-00	CARBON 4.7K 5% 1/6W	
R055	1-247-863-00	CARBON 22K 5% 1/6W	
R056	1-247-863-00	CARBON 22K 5% 1/6W	
R057	1-246-465-00	CARBON 470 5% 1/4W	
R065	1-247-815-00	CARBON 220 5% 1/6W	
R066	1-247-815-00	CARBON 220 5% 1/6W	
		SWITCH	
S001	1-553-075-21	SWITCH, PUSH	
S002	1-553-075-21	SWITCH, PUSH	
S003	1-553-075-21	SWITCH, PUSH	
S004	1-553-075-21	SWITCH, PUSH	
S005	1-553-075-21	SWITCH, PUSH	
S006	1-553-075-21	SWITCH, PUSH	
S007	1-553-075-21	SWITCH, PUSH	
S008	1-553-075-21	SWITCH, PUSH	
S009	1-553-075-21	SWITCH, PUSH	
S010	1-553-075-21	SWITCH, PUSH	
S011	1-553-075-21	SWITCH, PUSH	
S012	1-553-075-21	SWITCH, PUSH	
S013	1-553-075-21	SWITCH, PUSH	
S014	1-553-075-21	SWITCH, PUSH	
S015	1-553-075-21	SWITCH, PUSH	

****

Ref.No.	Part No.	Description	Remark
♣	A-1301-519-A	M2 BOARD, COMPLETE **********	
	4-359-103-00	HOLDER, LED	
♣	4-368-418-01	HOLDER, LED	
		CONNECTOR	
A6	♣ 1-560-123-00	PLUG, CONNECTOR (2.5MM) 3P	
		CAPACITOR	
C001	1-123-332-00	ELECT 47MF 20% 16V	
C002	1-123-356-00	ELECT 10MF 20% 50V	
C003	1-123-356-00	ELECT 10MF 20% 50V	
C004	1-123-369-00	ELECT 4.7MF 20% 50V	
C005	1-102-959-00	CERAMIC 22PF 5% 50V	
C006	1-102-963-00	CERAMIC 33PF 5% 50V	
C007	1-161-271-00	CERAMIC 100PF 5% 50V	
C009	1-136-165-00	FILM 0.1MF 5% 50V	
C010	1-123-369-00	ELECT 4.7MF 20% 50V	
C011	1-123-380-00	ELECT 1MF 20% 50V	
C014	1-102-114-00	CERAMIC 470PF 10% 50V	
C016	1-123-332-00	ELECT 47MF 20% 16V	
C017	1-101-004-00	CERAMIC 0.01MF 50V	
C022	1-123-356-00	ELECT 10MF 20% 16V	
C023	1-123-356-00	ELECT 10MF 20% 16V	
C030	1-123-356-00	ELECT 10MF 20% 50V	
C031	1-123-356-00	ELECT 10MF 20% 50V	
C032	1-123-356-00	ELECT 10MF 20% 50V	
		FILTER	
CF001	1-527-790-00	OSCILLATOR, CERAMIC	
		DIODE	
D004	8-719-911-19	DIODE 1SS119	
D005	8-719-911-19	DIODE 1SS119	
D007	8-719-101-35	DIODE RD3.0E-L2	
D008	8-719-911-19	DIODE 1SS119	
D011	8-719-911-19	DIODE 1SS119	
D013	8-719-911-19	DIODE 1SS119	
D014	8-719-911-19	DIODE 1SS119	
D015	8-719-911-19	DIODE 1SS119	
D020	8-719-911-19	DIODE 1SS119	
D035	8-719-911-19	DIODE 1SS119	
D036	8-719-911-19	DIODE 1SS119	
D037	8-719-911-19	DIODE 1SS119	
D038	8-719-911-19	DIODE 1SS119	
D039	8-719-911-19	DIODE 1SS119	
		IC	
IC001	8-759-602-09	IC CX523-110P	
IC002	8-759-600-92	IC M58657P	
IC003	8-759-157-40	IC UPC574J	
		COIL	
L001	1-407-717-00	MICRO INDUCTOR 1MMH	
L002	1-407-693-00	MICRO INDUCTOR 10UH	
		CONNECTOR	
M3	♣ 1-560-290-00	PLUG, CONNECTOR (2.5MM PITCH)	
M4	♣ 1-560-290-00	PLUG, CONNECTOR (2.5MM PITCH)	
M5	♣ 1-560-125-00	PLUG, CONNECTOR (2.5MM) 5P	
M7	♣ 1-560-129-00	PLUG, CONNECTOR (2.5MM) 9P	
M8	♣ 1-560-125-00	PLUG, CONNECTOR (2.5MM) 5P	
M10	♣ 1-560-290-00	PLUG, CONNECTOR (2.5MM PITCH)	
M12	♣ 1-560-124-00	PLUG, CONNECTOR (2.5MM PITCH)	
		TRANSISTOR	
Q003	8-729-603-30	TRANSISTOR 2SC403SP-3	
Q005	8-729-245-83	TRANSISTOR 2SC2458	
Q006	8-729-204-83	TRANSISTOR 2SA1048GR	
Q011	8-729-245-83	TRANSISTOR 2SC2458	
Q014	8-729-245-83	TRANSISTOR 2SC2458	
Q015	8-729-204-83	TRANSISTOR 2SA1048GR	
Q016	8-729-204-83	TRANSISTOR 2SA1048GR	
		RESISTOR	
R002	1-247-107-00	CARBON 100 5% 1/4W	
R003	1-247-847-00	CARBON 4.7K 5% 1/6W	
R004	1-247-875-00	CARBON 68K 5% 1/6W	
R005	1-247-867-00	CARBON 33K 5% 1/6W	
R006	1-247-867-00	CARBON 33K 5% 1/6W	
R009	1-247-867-00	CARBON 33K 5% 1/6W	
R010	1-247-833-00	CARBON 1.2K 5% 1/6W	
R011	1-247-841-00	CARBON 2.7K 5% 1/6W	
R012	1-247-155-00	CARBON 10K 5% 1/4W	
R014	1-247-831-00	CARBON 1K 5% 1/6W	
R015	1-246-473-00	CARBON 1K 5% 1/4W	
R016	1-247-831-00	CARBON 1K 5% 1/6W	
R018	1-246-505-00	CARBON 22K 5% 1/4W	
R019	1-247-863-00	CARBON 22K 5% 1/6W	
R020	1-247-863-00	CARBON 22K 5% 1/6W	
R021	1-247-863-00	CARBON 22K 5% 1/6W	
R022	1-247-875-00	CARBON 68K 5% 1/6W	
R023	1-247-807-00	CARBON 100 5% 1/6W	
R024	1-247-807-00	CARBON 100 5% 1/6W	
R025	1-247-863-00	CARBON 22K 5% 1/6W	
R026	1-247-863-00	CARBON 22K 5% 1/6W	
R027	1-247-863-00	CARBON 22K 5% 1/6W	
R028	1-247-863-00	CARBON 22K 5% 1/6W	
R029	1-247-847-00	CARBON 4.7K 5% 1/6W	
R030	1-247-855-00	CARBON 10K 5% 1/6W	
R031	1-247-831-00	CARBON 1K 5% 1/6W	
R032	1-247-859-00	CARBON 15K 5% 1/6W	
R033	1-247-841-00	CARBON 2.7K 5% 1/6W	
R034	1-247-849-00	CARBON 5.6K 5% 1/6W	
R035	1-247-847-00	CARBON 4.7K 5% 1/6W	
R037	1-247-847-00	CARBON 4.7K 5% 1/6W	
R038	1-247-831-00	CARBON 1K 5% 1/6W	
R039	1-247-831-00	CARBON 1K 5% 1/6W	
R040	1-247-831-00	CARBON 1K 5% 1/6W	
R041	1-246-505-00	CARBON 22K 5% 1/4W	
R042	1-247-867-00	CARBON 33K 5% 1/6W	
R043	1-247-815-00	CARBON 220 5% 1/6W	
R044	1-247-815-00	CARBON 220 5% 1/6W	
R045	1-247-815-00	CARBON 220 5% 1/6W	

M2 C S2 EJ

Ref.No.	Part No.	Description				Remark
R046	1-247-815-00	CARBON	220	5%	1/6W	
R047	1-247-815-00	CARBON	220	5%	1/6W	
R048	1-247-815-00	CARBON	220	5%	1/6W	
R049	1-247-815-00	CARBON	220	5%	1/6W	
R050	1-247-815-00	CARBON	220	5%	1/6W	
R051	1-247-815-00	CARBON	220	5%	1/6W	
R058	1-247-859-00	CARBON	15K	5%	1/6W	
R059	1-247-157-00	CARBON	12K	5%	1/4W	
R060	1-247-155-00	CARBON	10K	5%	1/4W	
R062	1-246-507-00	CARBON	27K	5%	1/4W	
R063	1-247-855-00	CARBON	10K	5%	1/6W	
R064	1-247-831-00	CARBON	1K	5%	1/6W	
R067	1-247-827-00	CARBON	680	5%	1/6W	
R068	1-247-827-00	CARBON	680	5%	1/6W	
R070	1-247-883-00	CARBON	150K	5%	1/6W	
R080	1-247-851-00	CARBON	6.8K	5%	1/6W	
R081	1-247-847-00	CARBON	4.7K	5%	1/6W	

****

♠:A-1330-463-A C BOARD, COMPLETE
****

1-526-616-00 SOCKET, CRT
♠:4-362-279-00 SPACER, TR

CONNECTOR

C1 ♠:1-508-786-00 2P PLUG (M)

CAPACITOR

C701	1-123-356-00	ELECT	10MF	20%	50V
C702	1-129-737-00	FILM	0.047MF	20%	630V
C703	1-102-249-00	CERAMIC	680PF	20%	2KV
C705	1-102-109-00	CERAMIC	180PF	10%	50V
C706	1-102-111-00	CERAMIC	270PF	10%	50V
C707	1-102-109-00	CERAMIC	180PF	10%	50V

COIL

L701 1-408-618-00 MICRO INDUCTOR 180UH

TRANSISTOR

Q701	8-729-322-78	TRANSISTOR 2SC2278
Q702	8-729-322-78	TRANSISTOR 2SC2278
Q703	8-729-322-78	TRANSISTOR 2SC2278

RESISTOR

R701	1-247-819-00	CARBON	330	5%	1/6W	
R702	1-247-845-00	CARBON	3.9K	5%	1/6W	
R703	1-206-692-00	METAL OXIDE	15K	5%	2W	F
R704	1-247-845-00	CARBON	3.9K	5%	1/6W	
R705	1-247-815-00	CARBON	220	5%	1/6W	
R706	1-206-692-00	METAL OXIDE	15K	5%	2W	F
R707	1-247-823-00	CARBON	470	5%	1/6W	
R708	1-247-843-00	CARBON	3.3K	5%	1/6W	
R709	1-206-692-00	METAL OXIDE	15K	5%	2W	F
R710	1-202-824-00	SOLID	3.3K		1/2W	
R711	1-202-837-00	SOLID	82K		1/2W	
R713	1-202-824-00	SOLID	3.3K		1/2W	
R714	1-202-814-51	SOLID	33K		1/2W	
R715	1-202-841-00	SOLID	180K		1/2W	
R716	1-202-824-00	SOLID	3.3K		1/2W	
R717	1-202-719-00	SOLID	1M	10%	1/2W	
R718	1-202-549-00	SOLID	100	10%	1/2W	
R719	1-202-842-51	SOLID	220K		1/2W	
R720	1-202-846-00	SOLID	470K		1/2W	
R721	1-202-848-00	SOLID	680K		1/2W	
R726	1-247-807-00	CARBON	100	5%	1/6W	
R727	1-247-807-00	CARBON	100	5%	1/6W	
R728	1-247-807-00	CARBON	100	5%	1/6W	

VARIABLE RESISTOR

RV701	1-228-723-00	RES, ADJ, CERAMIC CARBON 4.7K
RV702	1-228-719-00	RES, ADJ, CERAMIC CARBON 470
RV703	1-228-723-00	RES, ADJ, CERAMIC CARBON 4.7K
RV704	1-228-719-00	RES, ADJ, CERAMIC CARBON 470
RV705	1-228-723-00	RES, ADJ, CERAMIC CARBON 4.7K
RV706	1-226-114-00	RES, ADJ, METAL GLAZE 2.2M
RV707	1-226-114-00	RES, ADJ, METAL GLAZE 2.2M

SPARK GAP

SG701	1-519-063-XX	DISCHARGING GAP
SG702	1-519-063-XX	DISCHARGING GAP
SG703	1-519-063-XX	DISCHARGING GAP
SG704	1-519-063-XX	DISCHARGING GAP
SG705	1-519-063-XX	DISCHARGING GAP
SG706	1-519-063-XX	DISCHARGING GAP

****

♠:1-610-433-00 S2 BOARD
****

1-515-511-00 RELAY, HIGH FREQUENCY

DIODE

D481 8-719-924-06 DIODE ERC24-06S

RESISTOR

R481 1-202-824-00 SOLID 3.3K 10% 1/2W

****

♠:1-610-851-00 EJ BOARD
****

1-507-891-00 JACK, EARPHONE

EJ N

TRANSFORMER

T901 ⚠1-427-534-00 TRANSFORMER, OUTPUT

****

♠:1-606-794-00 N BOARD
****

♠:4-342-117-00 CASE, SHIELD (MAIN), R
♠:4-342-118-00 LID, SHIELD CASE, R

CAPACITOR

C1	1-123-617-00	ELECT	10MF	20%	16V
C2	1-123-617-00	ELECT	10MF	20%	16V
C3	1-123-617-00	ELECT	10MF	20%	16V
C4	1-161-057-00	CERAMIC	0.033MF	10%	25V
C5	1-106-184-00	MYLAR	0.0033MF	5%	50V
C6	1-123-821-00	ELECT	47MF	20%	16V

DIODE

D1 8-719-110-32 DIODE PH302B

IC

IC1 8-759-102-84 IC UPC1373HA

COIL

L1 1-404-310-00 COIL

****

V

V

Ref.No.	Part No.	Description				Remark
♠:A-1325-013-A		V BOARD, COMPLETE (FOR GERMANY) **********				
		CAPACITOR				
C1	1-106-220-00	MYLAR	0.1MF	10%	100V	
C2	1-123-356-00	ELECT	10MF	20%	16V	
C3	1-106-220-00	MYLAR	0.1MF	10%	100V	
C4	1-102-129-00	CERAMIC	0.01MF	10%	50V	
C5	1-102-651-00	CERAMIC	68PF	5%	50V	
C6	1-123-356-00	ELECT	10MF	20%	16V	
C7	1-123-380-00	ELECT	1MF	20%	50V	
C8	1-102-074-00	CERAMIC	0.001MF	10%	50V	
C9	1-102-074-00	CERAMIC	0.001MF	10%	50V	
C10	1-102-074-00	CERAMIC	0.001MF	10%	50V	
C11	1-102-773-00	CERAMIC	330PF	5%	50V	
C12	1-101-984-00	CERAMIC	47PF	5%	50V	
C13	1-102-074-00	CERAMIC	0.001MF	10%	50V	
C14	1-106-220-00	MYLAR	0.1MF	10%	100V	
C15	1-129-794-00	FILM	0.0033MF	5%	100V	
C16	1-106-220-00	MYLAR	0.1MF	10%	100V	
C17	1-123-321-00	ELECT	220MF	20%	16V	
C18	1-123-380-00	ELECT	1MF	20%	50V	
C19	1-106-220-00	MYLAR	0.1MF	10%	100V	
C20	1-106-220-00	MYLAR	0.1MF	10%	100V	
C23	1-106-220-00	MYLAR	0.1MF	10%	100V	
C24	1-106-220-00	MYLAR	0.1MF	10%	100V	
C25	1-106-220-00	MYLAR	0.1MF	10%	100V	
C26	1-106-220-00	MYLAR	0.1MF	10%	100V	
C27	1-106-220-00	MYLAR	0.1MF	10%	100V	
C28	1-106-220-00	MYLAR	0.1MF	10%	100V	
C36	1-106-220-00	MYLAR	0.1MF	10%	100V	
C39	1-123-380-00	ELECT	1MF	20%	50V	
C40	1-102-973-00	CERAMIC	100PF	5%	50V	
C41	1-123-308-00	ELECT	220MF	20%	6.3V	
C45	1-106-220-00	MYLAR	0.1MF	10%	100V	
C46	1-101-006-00	CERAMIC	0.047MF		50V	
C47	1-123-332-00	ELECT	47MF	20%	16V	
C48	1-123-297-00	ELECT	330MF	20%	6.3V	
C50	1-102-074-00	CERAMIC	0.001MF	10%	50V	
C52	1-123-321-00	ELECT	220MF	20%	16V	
		TRIMMER				
CV1	1-141-181-11	CAP, TRIMMER				
		DIODE				
D1	8-719-815-55	DIODE 1S1555				
D2	8-719-100-68	DIODE RD13E-B2				
D3	8-719-100-36	DIODE RD5.6E-B3				
		IC				
IC1	8-759-960-40	IC SAA5040B				
IC2	8-759-950-30	IC SAA5030				
IC3	8-759-950-20	IC SAA5020				
IC4	8-759-950-51	IC SAA5051				
IC5	8-759-901-61	IC SN74LS161AN				
IC6	8-759-901-61	IC SN74LS161AN				
IC7	8-759-900-83	IC SN74LS83AN				
IC8	8-759-121-10	IC UPD2114LC				
IC9	8-759-121-10	IC UPD2114LC				
IC10	8-759-113-87	IC UPC1387C				
IC11	8-759-900-32	IC SN74LS32N				
IC12	8-759-900-02	IC SN74LS02N				
		COIL				
L1	1-404-291-00	COIL				
L2	1-404-292-00	COIL				
L5	1-408-227-00	MICRO INDUCTOR 470UH				
		TRANSISTOR				
Q1	8-729-177-43	TRANSISTOR 2SD774				
Q2	8-729-245-83	TRANSISTOR 2SC2458				
Q3	8-729-245-83	TRANSISTOR 2SC2458				
Q4	8-729-109-53	TRANSISTOR 2SD795A				
Q5	8-729-109-53	TRANSISTOR 2SD795A				
		RESISTOR				
R1	1-246-465-00	CARBON	470	5%	1/4W	
R2	1-246-465-00	CARBON	470	5%	1/4W	
R3	1-246-465-00	CARBON	470	5%	1/4W	
R4	1-246-521-00	CARBON	100K	5%	1/4W	
R5	1-246-473-00	CARBON	1K	5%	1/4W	
R6	1-246-493-00	CARBON	6.8K	5%	1/4W	
R7	1-246-493-00	CARBON	6.8K	5%	1/4W	
R8	1-246-469-00	CARBON	680	5%	1/4W	
R9	1-246-477-00	CARBON	1.5K	5%	1/4W	
R10	1-246-509-00	CARBON	33K	5%	1/4W	
R11	1-247-133-00	CARBON	1.2K	5%	1/4W	
R12	1-247-133-00	CARBON	1.2K	5%	1/4W	
R13	1-247-133-00	CARBON	1.2K	5%	1/4W	
R14	1-246-493-00	CARBON	6.8K	5%	1/4W	
R20	1-247-155-00	CARBON	10K	5%	1/4W	
R21	1-213-139-00	METAL OXIDE	470	5%	1W	F
R22	1-247-228-00	CARBON	330	5%	1/2W	
R29	1-246-473-00	CARBON	1K	5%	1/4W	
R35	1-246-511-00	CARBON	39K	5%	1/4W	
R36	1-246-465-00	CARBON	470	5%	1/4W	
R37	1-246-489-00	CARBON	4.7K	5%	1/4W	
R39	1-246-477-00	CARBON	1.5K	5%	1/4W	
R41	1-246-491-00	CARBON	5.6K	5%	1/4W	
R42	1-247-079-00	CARBON	4.7	5%	1/4W	
		VARIABLE RESISTOR				
RV1	1-228-724-00	RES, ADJ, CARBON 10K				
RV2	1-228-724-00	RES, ADJ, CARBON 10K				
		CONNECTOR				
V1	♠:1-560-124-00	PLUG, CONNECTOR (2.5MM PITCH)				
V2	♠:1-560-124-00	PLUG, CONNECTOR (2.5MM PITCH)				
V4	♠:1-560-124-00	PLUG, CONNECTOR (2.5MM PITCH)				
V5	♠:1-560-124-00	PLUG, CONNECTOR (2.5MM PITCH)				
V9	♠:1-560-126-00	PLUG, CONNECTOR (2.5MM PITCH)				
		CRYSTAL				
X1	1-527-734-00	VIBRATOR, CRYSTAL				
♠:A-1325-014-A		V BOARD, COMPLETE (FOR SWEDEN) **********				
		CAPACITOR				
C1	1-106-220-00	MYLAR	0.1MF	10%	100V	
C2	1-123-356-00	ELECT	10MF	20%	16V	
C3	1-106-220-00	MYLAR	0.1MF	10%	100V	
C4	1-102-129-00	CERAMIC	0.01MF	10%	50V	
C5	1-102-651-00	CERAMIC	68PF	5%	50V	
C6	1-123-356-00	ELECT	10MF	20%	16V	
C7	1-123-380-00	ELECT	1MF	20%	50V	
C8	1-102-074-00	CERAMIC	0.001MF	10%	50V	
C9	1-102-074-00	CERAMIC	0.001MF	10%	50V	
C10	1-102-074-00	CERAMIC	0.001MF	10%	50V	
C11	1-102-773-00	CERAMIC	330PF	5%	50V	
C12	1-101-984-00	CERAMIC	47PF	5%	50V	
C13	1-102-074-00	CERAMIC	0.001MF	10%	50V	
C14	1-106-220-00	MYLAR	0.1MF	10%	100V	
C15	1-129-794-00	FILM	0.0033MF	5%	100V	
C16	1-106-220-00	MYLAR	0.1MF	10%	100V	
C17	1-123-321-00	ELECT	220MF	20%	16V	
C18	1-123-380-00	ELECT	1MF	20%	50V	
C19	1-106-220-00	MYLAR	0.1MF	10%	100V	
C20	1-106-220-00	MYLAR	0.1MF	10%	100V	
C23	1-106-220-00	MYLAR	0.1MF	10%	100V	
C24	1-106-220-00	MYLAR	0.1MF	10%	100V	
C25	1-106-220-00	MYLAR	0.1MF	10%	100V	
C26	1-106-220-00	MYLAR	0.1MF	10%	100V	
C27	1-106-220-00	MYLAR	0.1MF	10%	100V	
C28	1-106-220-00	MYLAR	0.1MF	10%	100V	
C36	1-106-220-00	MYLAR	0.1MF	10%	100V	
C39	1-123-380-00	ELECT	1MF	20%	50V	
C40	1-102-973-00	CERAMIC	100PF	5%	50V	
C41	1-123-308-00	ELECT	220MF	20%	6.3V	
C45	1-106-220-00	MYLAR	0.1MF	10%	100V	
C46	1-101-006-00	CERAMIC	0.047MF		50V	
C47	1-123-332-00	ELECT	47MF	20%	16V	
C48	1-123-297-00	ELECT	330MF	20%	6.3V	
C50	1-102-074-00	CERAMIC	0.001MF	10%	50V	
C52	1-123-321-00	ELECT	220MF	20%	16V	
		TRIMMER				
CV1	1-141-181-11	CAP, TRIMMER				
		DIODE				
D1	8-719-911-19	DIODE 1S119				
D2	8-719-100-68	DIODE RD13E-B2				
D3	8-719-100-36	DIODE RD5.6E-B3				
		IC				
IC1	8-759-960-40	IC SAA5040B				
IC2	8-759-950-30	IC SAA5030				
IC3	8-759-950-20	IC SAA5020				
IC4	8-759-950-51	IC SAA5051				
IC5	8-759-901-61	IC SN74LS161AN				
IC6	8-759-901-61	IC SN74LS161AN				
IC7	8-759-900-83	IC SN74LS83AN				
IC8	8-759-121-10	IC UPD2114LC				
IC9	8-759-121-10	IC UPD2114LC				
IC10	8-759-113-87	IC UPC1387C				
IC11	8-759-900-32	IC SN74LS32N				
IC12	8-759-900-02	IC SN74LS02N				
		COIL				
L1	1-404-291-00	COIL				
L2	1-404-292-00	COIL				
L5	1-408-227-00	MICRO INDUCTOR 470UH				
		TRANSISTOR				
Q1	8-729-177-43	TRANSISTOR 2SD774				
Q2	8-729-245-83	TRANSISTOR 2SC2458				
Q3	8-729-245-83	TRANSISTOR 2SC2458				
Q4	8-729-109-53	TRANSISTOR 2SD795A				
Q5	8-729-109-53	TRANSISTOR 2SD795A				

V

Ref.No.	Part No.	Description				Remark
		RESISTOR				
R1	1-246-465-00	CARBON	470	5%	1/4W	
R2	1-246-465-00	CARBON	470	5%	1/4W	
R3	1-246-465-00	CARBON	470	5%	1/4W	
R4	1-246-521-00	CARBON	100K	5%	1/4W	
R5	1-246-473-00	CARBON	1K	5%	1/4W	
R6	1-246-493-00	CARBON	6.8K	5%	1/4W	
R7	1-246-493-00	CARBON	6.8K	5%	1/4W	
R8	1-246-469-00	CARBON	680	5%	1/4W	
R9	1-246-477-00	CARBON	1.5K	5%	1/4W	
R10	1-246-509-00	CARBON	33K	5%	1/4W	
R11	1-247-133-00	CARBON	1.2K	5%	1/4W	
R12	1-247-133-00	CARBON	1.2K	5%	1/4W	
R13	1-247-133-00	CARBON	1.2K	5%	1/4W	
R14	1-246-493-00	CARBON	6.8K	5%	1/4W	
R20	1-247-155-00	CARBON	10K	5%	1/4W	
R21	1-213-139-00	METAL OXIDE	470	5%	1W	F
R22	1-247-228-00	CARBON	330	5%	1/2W	
R29	1-246-473-00	CARBON	1K	5%	1/4W	
R35	1-246-511-00	CARBON	39K	5%	1/4W	
R36	1-246-465-00	CARBON	470	5%	1/4W	
R37	1-246-489-00	CARBON	4.7K	5%	1/4W	
R39	1-246-477-00	CARBON	1.5K	5%	1/4W	
R41	1-246-491-00	CARBON	5.6K	5%	1/4W	
R42	1-247-079-00	CARBON	4.7	5%	1/4W	
		VARIABLE RESISTOR				
RV1	1-228-724-00	RES, ADJ, CARBON 10K				
RV2	1-228-724-00	RES, ADJ, CARBON 10K				
		CONNECTOR				
V1	♣:1-560-124-00	PLUG, CONNECTOR (2.5MM PITCH)				
V2	♣:1-560-124-00	PLUG, CONNECTOR (2.5MM PITCH)				
V4	♣:1-560-124-00	PLUG, CONNECTOR (2.5MM PITCH)				
V5	♣:1-560-124-00	PLUG, CONNECTOR (2.5MM PITCH)				
V9	♣:1-560-126-00	PLUG, CONNECTOR (2.5MM PITCH)				
		CRYSTAL				
X1	1-527-734-00	VIBRATOR, CRYSTAL				

****

♣:A-1325-015-A V BOARD, COMPLETE (FOR BRITAIN)
****

Ref.No.	Part No.	Description				Remark
		CAPACITOR				
C1	1-106-220-00	MYLAR	0.1MF	10%	100V	
C2	1-123-356-00	ELECT	10MF	20%	16V	
C3	1-106-220-00	MYLAR	0.1MF	10%	100V	
C4	1-102-129-00	CERAMIC	0.01MF	10%	50V	
C5	1-102-651-00	CERAMIC	68PF	5%	50V	
C6	1-123-356-00	ELECT	10MF	20%	16V	
C7	1-123-380-00	ELECT	1MF	20%	50V	
C8	1-102-074-00	CERAMIC	0.001MF	10%	50V	
C9	1-102-074-00	CERAMIC	0.001MF	10%	50V	
C10	1-102-074-00	CERAMIC	0.001MF	10%	50V	
C11	1-102-773-00	CERAMIC	330PF	5%	50V	
C12	1-101-984-00	CERAMIC	47PF	5%	50V	
C13	1-102-074-00	CERAMIC	0.001MF	10%	50V	
C14	1-106-220-00	MYLAR	0.1MF	10%	100V	
C15	1-129-794-00	FILM	0.0033MF	5%	100V	
C16	1-106-220-00	MYLAR	0.1MF	10%	100V	
C17	1-123-321-00	ELECT	220MF	20%	16V	
C18	1-123-380-00	ELECT	1MF	20%	50V	
C19	1-106-220-00	MYLAR	0.1MF	10%	100V	
C20	1-106-220-00	MYLAR	0.1MF	10%	100V	
C23	1-106-220-00	MYLAR	0.1MF	10%	100V	
C24	1-106-220-00	MYLAR	0.1MF	10%	100V	
C25	1-106-220-00	MYLAR	0.1MF	10%	100V	
C26	1-106-220-00	MYLAR	0.1MF	10%	100V	
C27	1-106-220-00	MYLAR	0.1MF	10%	100V	
C28	1-106-220-00	MYLAR	0.1MF	10%	100V	
C36	1-106-220-00	MYLAR	0.1MF	10%	100V	
C39	1-123-380-00	ELECT	1MF	20%	50V	
C40	1-102-973-00	CERAMIC	100PF	5%	50V	
C41	1-123-308-00	ELECT	220MF	20%	6.3V	
C45	1-106-220-00	MYLAR	0.1MF	10%	100V	
C46	1-101-006-00	CERAMIC	0.047MF		50V	
C47	1-123-332-00	ELECT	47MF	20%	16V	
C48	1-123-297-00	ELECT	330MF	20%	6.3V	
C50	1-102-074-00	CERAMIC	0.001MF	10%	50V	
C52	1-123-321-00	ELECT	220MF	20%	16V	
		TRIMMER				
CV1	1-141-181-11	CAP, TRIMMER				
		DIODE				
D1	8-719-911-19	DIODE 1S119				
D2	8-719-100-68	DIODE RD13E-B2				
D3	8-719-100-36	DIODE RD5.6E-B3				
		IC				
IC1	8-759-960-40	IC SAA5040B				
IC2	8-759-950-30	IC SAA5030				
IC3	8-759-950-20	IC SAA5020				
IC4	8-759-950-50	IC SAA5050				
IC5	8-759-901-61	IC SN74LS161AN				
IC6	8-759-901-61	IC SN74LS161AN				
IC7	8-759-900-83	IC SN74LS83AN				
IC8	8-759-121-10	IC UPD2114LC				
IC9	8-759-121-10	IC UPD2114LC				
IC10	8-759-113-87	IC UPC1387C				
IC11	8-759-900-32	IC SN74LS32N				
IC12	8-759-900-02	IC SN74LS02N				

V C

Ref.No.	Part No.	Description				Remark
		COIL				
L1	1-404-291-00	COIL				
L2	1-404-292-00	COIL				
L5	1-408-227-00	MICRO INDUCTOR 470UH				
		TRANSISTOR				
Q1	8-729-177-43	TRANSISTOR 2SD774				
Q2	8-729-245-83	TRANSISTOR 2SC2458				
Q3	8-729-245-83	TRANSISTOR 2SC2458				
Q4	8-729-109-53	TRANSISTOR 2SD795A				
Q5	8-729-109-53	TRANSISTOR 2SD795A				
		RESISTOR				
R1	1-246-465-00	CARBON	470	5%	1/4W	
R2	1-246-465-00	CARBON	470	5%	1/4W	
R3	1-246-465-00	CARBON	470	5%	1/4W	
R4	1-246-521-00	CARBON	100K	5%	1/4W	
R5	1-246-473-00	CARBON	1K	5%	1/4W	
R6	1-246-493-00	CARBON	6.8K	5%	1/4W	
R7	1-246-493-00	CARBON	6.8K	5%	1/4W	
R8	1-246-469-00	CARBON	680	5%	1/4W	
R9	1-246-477-00	CARBON	1.5K	5%	1/4W	
R10	1-246-509-00	CARBON	33K	5%	1/4W	
R11	1-247-133-00	CARBON	1.2K	5%	1/4W	
R12	1-247-133-00	CARBON	1.2K	5%	1/4W	
R13	1-247-133-00	CARBON	1.2K	5%	1/4W	
R14	1-246-493-00	CARBON	6.8K	5%	1/4W	
R20	1-247-155-00	CARBON	10K	5%	1/4W	
R21	1-213-139-00	METAL OXIDE	470	5%	1W	F
R22	1-247-228-00	CARBON	330	5%	1/2W	
R29	1-246-473-00	CARBON	1K	5%	1/4W	
R35	1-246-511-00	CARBON	39K	5%	1/4W	
R36	1-246-465-00	CARBON	470	5%	1/4W	
R37	1-246-489-00	CARBON	4.7K	5%	1/4W	
R39	1-246-477-00	CARBON	1.5K	5%	1/4W	
R41	1-246-491-00	CARBON	5.6K	5%	1/4W	
R42	1-247-079-00	CARBON	4.7	5%	1/4W	
		VARIABLE RESISTOR				
RV1	1-228-724-00	RES, ADJ, CARBON 10K				
RV2	1-228-724-00	RES, ADJ, CARBON 10K				
		CONNECTOR				
V1	♣:1-560-124-00	PLUG, CONNECTOR (2.5MM PITCH)				
V2	♣:1-560-124-00	PLUG, CONNECTOR (2.5MM PITCH)				
V4	♣:1-560-124-00	PLUG, CONNECTOR (2.5MM PITCH)				
V5	♣:1-560-124-00	PLUG, CONNECTOR (2.5MM PITCH)				
V9	♣:1-560-126-00	PLUG, CONNECTOR (2.5MM PITCH)				
		CRYSTAL				
X1	1-527-734-00	VIBRATOR, CRYSTAL				

Ref.No.	Part No.	Description				Remark
	♣:A-1330-463-A	C BOARD, COMPLETE				
		**********				
	1-526-616-00	SOCKET, CRT				
	♣:4-362-279-00	SPACER, TR				
		CONNECTOR				
C1	♣:1-508-786-00	2P PLUG (M)				
		CAPACITOR				
C701	1-123-356-00	ELECT	10MF	20%	50V	
C702	1-129-737-00	FILM	0.047MF	20%	630V	
C703	1-102-249-00	CERAMIC	680PF	20%	2KV	
C705	1-102-109-00	CERAMIC	180PF	10%	50V	
C706	1-102-111-00	CERAMIC	270PF	10%	50V	
C707	1-102-109-00	CERAMIC	180PF	10%	50V	
		COIL				
L701	1-408-618-00	MICRO INDUCTOR 180UH				
		TRANSISTOR				
Q701	8-729-322-78	TRANSISTOR 2SC2278				
Q702	8-729-322-78	TRANSISTOR 2SC2278				
Q703	8-729-322-78	TRANSISTOR 2SC2278				
		RESISTOR				
R701	1-247-819-00	CARBON	330	5%	1/6W	
R702	1-247-845-00	CARBON	3.9K	5%	1/6W	
R703	1-206-692-00	METAL OXIDE	15K	5%	2W	F
R704	1-247-845-00	CARBON	3.9K	5%	1/6W	
R705	1-247-815-00	CARBON	220	5%	1/6W	
R706	1-206-692-00	METAL OXIDE	15K	5%	2W	F
R707	1-247-823-00	CARBON	470	5%	1/6W	
R708	1-247-843-00	CARBON	3.3K	5%	1/6W	
R709	1-206-692-00	METAL OXIDE	15K	5%	2W	F
R710	1-202-824-00	SOLID	3.3K		1/2W	
R711	1-202-837-00	SOLID	82K		1/2W	
R713	1-202-824-00	SOLID	3.3K		1/2W	
R714	1-202-814-51	SOLID	33K		1/2W	
R715	1-202-841-00	SOLID	180K		1/2W	
R716	1-202-824-00	SOLID	3.3K		1/2W	
R717	1-202-719-00	SOLID	1M	10%	1/2W	
R718	1-202-549-00	SOLID	100	10%	1/2W	
R719	1-202-842-51	SOLID	220K		1/2W	
R720	1-202-846-00	SOLID	470K		1/2W	
R721	1-202-848-00	SOLID	680K		1/2W	
R726	1-247-807-00	CARBON	100	5%	1/6W	
R727	1-247-807-00	CARBON	100	5%	1/6W	
R728	1-247-807-00	CARBON	100	5%	1/6W	
		VARIABLE RESISTOR				
RV701	1-228-723-00	RES, ADJ, CERAMIC CARBON 4.7K				

MISCELLANEOUS
****

	1-161-834-00	CAP (SMALL FEED-THROUGH)1000PF
⚠	1-228-482-32	RESISTOR ASSY, HIGH-VOLTAGE
⚠	1-451-204-52	DEFLECTION YOKE (SY-108B)
	1-452-032-00	MAGNET, DISK; 10MM ϕ
	1-452-094-00	MAGNET, ROTATABLE DISK; 15MM ϕ
	1-452-146-21	MAGNET, BMC
♠:	1-507-900-00	JACK
⚠	1-534-817-31	CORD, POWER
⚠	1-536-683-21	CONNECTOR, COAXIAL ANTENNA
	1-543-171-00	CORE, RING
♠:	1-557-009-21	CABLE, P-P
♠:	1-557-024-00	CABLE (WITH PIN)
♠:	1-557-024-00	CABLE (WITH PIN)
L901 ⚠	1-426-087-71	COIL, DEGAUSSING
L902 ⚠	1-426-087-71	COIL, DEGAUSSING
S451 ⚠	1-552-806-21	SWITCH, PUSH
S901 ⚠	1-553-225-12	SWITCH, PUSH
SP901	1-503-260-00	SPEAKER (120E004)
SP902	1-503-256-00	SPEAKER (040T004)
T851 ⚠	1-439-303-31	TRANSFORMER ASSY, FLYBACK

Ref.No.	Part No.	Description	Remark
TU101 ⚠	1-463-421-21	TUNER, ET (BT-883)	
V901 ⚠	8-737-251-05	CRT (A49JHT00X)	

****

ACCESSORIES AND PACKING MATERIALS
****

Part No.	Description	Remark
A-1470-625-A	COMMANDER ASSY (RM-635)	
1-504-034-72	MAGNETIC EARPHONE ME-20	
3-701-308-00	LABEL, PRODUCT COLOR (FOR BLACK)	
3-701-347-00	LABEL, PRODUCT COLOR (FOR WALNUT, ROSE)	
4-312-246-00	BAG, PROTECTION	
4-367-242-00	CUSHION (UPPER) (ASSY)	
4-367-243-00	CUSHION (LOWER) (ASSY)	
4-368-901-00	INDIVIDUAL CARTON	
4-493-827-71	MANUAL, INSTRUCTION	